ORDER NO.HAD8802033C9

Service Manual

Amplifier

Stereo Power Amplifier

SE-A50

Color

(K).....Black Type

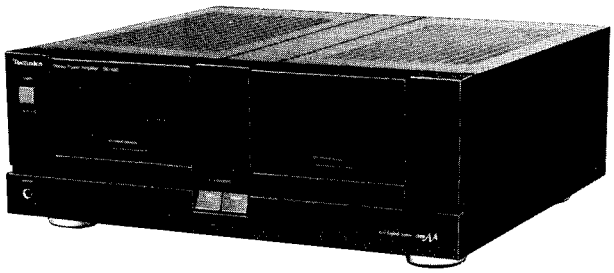

Area

Color	Area
(K)	(E) .....Continental Europe.
(K)	(EH).....Holland.
(K)	(EB).....Belgium.
(K)	(EF) .....France.
(K)	(EK).....United Kingdom.
(K)	(EG).....F.R.Germany.
(K)	(Ei) .....Italy.
(K)	(XL) .....Australia.
(K)	(XA).....Asia, Latin America, Middle Near East, Africa & Oceania.
(K)	(PA).....Far East PX.
(K)	(PE).....European Military.

SPECIFICATIONS

(DIN 45 500)

■ AMPLIFIER SECTION

20 Hz ~ 20 kHz continuous power output	
stereo operation both channels driven	
For United Kingdom	2 x 115 W (8Ω)
	2 x 160 W (4Ω)
For others	2 x 125 W (8Ω)
	2 x 175 W (4Ω)
monaural (BTL) operation	
For United Kingdom	300 W (8Ω)
For others	350 W (8Ω)
40 Hz ~ 16 kHz continuous power output (IEC)	
stereo operation both channels driven	
For United Kingdom	2 x 120 W (8Ω)
	2 x 160 W (4Ω)
For others	2 x 130 W (8Ω)
	2 x 185 W (4Ω)
monaural (BTL) operation	
For United Kingdom	320 W (8Ω)
For others	370 W (8Ω)
1 kH continuous power output (DIN)	
stereo operation both channels driven	
For United Kingdom	2 x 125 W (8Ω)
	2 x 180 W (4Ω)
For others	2 x 135 W (8Ω)
	2 x 210 W (4Ω)
monaural (BTL) operation	
For United Kingdom	360 W (8Ω)
For others	420 W (8Ω)
Total harmonic distortion	
rated power at 20 Hz ~ 20 kHz	
stereo operation	0.002% (8Ω)
	0.005% (4Ω)
monaural (BTL) operation	0.005% (8Ω)
half power at 20 Hz ~ 20 kHz	0.001% (8Ω)
half power at 1 kHz	0.0005% (8Ω)
-26 dB power at 1kHz	0.001% (4Ω)
50 mW power at 1kHz	0.003% (4Ω)
Intermodulation distortion	
rated power at 250 Hz:8 kHz = 4:1, 4Ω	0.002%
rated power at 60 Hz:7 kHz = 4:1,SMPTE,8Ω	0.002%
TIM (Transient Intermodulation Distortion)	unmeasurably small
Power bandwidth	
both channels driven,-3dB	5 Hz ~ 80kHz (0.02%)
Residual hum and noise	0.3 mV
Damping factor	100(8Ω),50 (4Ω)
Input sensitivity and impedance	1 V/47 kΩ
S/N	105 dB (116 dB,IHF,A)
Frequency responce	20 Hz ~ 20 kHz, +0 dB,-0.1 dB
	0.8 Hz ~ 150 kHz, -3 dB
Channel balance, 250 Hz ~ 6,300 Hz	±1 dB
Channel separation, 1 kHz	80 dB
Headphones output level	
and impedance	770 mV/330 Ω
Load impedance	
stereo operation	
MAIN or REMOTE	4 Ω ~ 16 Ω
MAIN and REMOTE	8 Ω ~ 16 Ω
monaural	
MAIN or REMOTE	8 Ω ~ 16 Ω
MAIN and REMOTE	16 Ω

■ GENERAL

Power consumption	
For United Kingdom	900 W
For others	950 W
Power supply	
For continental Europe	AC 50 Hz/60 Hz,220 V
For United Kingdom,Australia and others.	AC50 Hz/60 Hz, 110 V/127 V/220 V/240 V
Dimensions (W x H x D)	430 x 161 x 408 mm (16-15/16" x 6-11/32" x 16-1/16")
Weight	16.6kg (36.4 lb.)

Notes:

1.Specifications are subject to change without notice. Weight and dimensions are approximate.

2.Total harmonic distortion is measured by the digital spectrum analyzer (H.P. 3045 system).

Technics

Matsushita Electric Trading Co., Ltd.
P.O. Box 288, CentraOsaka Japan

Panasonic Tokyo Office
Matsushita Electric Trading Co., Ltd.
6th Floor, World Trade Center Bldg.,
No. 4-1,Hamamatsu-cho 2-Chome,Minato-ku,
Tokyo 105,Japan

■ CONTENTS

	Page
BEFORE REPAIR AND ADJUSTMENT	2
PROTECTION CIRCUITRY	2
ACCESSORIES	2
LOCATION OF CONTROLS	3
DISASSEMBLY INSTRUCTIONS	4 ~ 6
PRINTED CIRCUIT BOARDS	7 ~ 10
TERMINAL GUIDE OF TRANSISTORS,DIODES AND IC'S	10
SCHEMATIC DIAGRAM	11 ~ 15
WIRING CONNECTION DIAGRAM	16
BLAOCK DIAGRAM	17
MEASUREMENTS AND ADJUSTMENTS	18
EXPLODED VIEW	19 ~ 21
REPLACEMENT PARTS LIST	22 ~ 24
RESISTORS AND CAPACITORS	25,26

■ BEFORE REPAIR AND ADJUSTMENT

(1) Turn off the power supply. Using a 10Ω, 10W resistor, shortcircuit both ends of power supply capacitors (C609,C610)in order to discharge the voltage.

(2) Before turning on the power switch of the unit.

A. Connect the voltage controller to the primary side.

B. Connect the AC ampere meter to the primary side or connect the DC voltage meter to the "±B" circuit of the secondary side.

C. Turn the VR of ICQ(VR401,VR402,VR551 and VR552)to minimum(counterclockwise).

D. After setting the output to zero of the voltage contoller,turn on the power switch of the unit. And increase the output of voltage controller gradually. Then, check carefully whether the current value of primary side become more than following value or whether the DC voltage of secondary side is increasing slowly.

E. If the value of current is increasing unusually or the DC voltage is not increasing,lower the output level of voltage contoller immediately.

● The current value of the primary side at no signal. (Confirm the power supply voltage of each area and provided voltage of the unit.)

Power supply voltage	AC110V	AC127V	AC220V	AC240V
Consumed current 50/60Hz	400 ~ 850mA	390 ~ 840mA	200 ~ 450mA	180 ~ 430mA

■ PROTECTION CIRCUITRY

The protection circuitry of the amplifier may have operated if either of the following conditions is noticed:

● No sound is heard when the power is turned on.

● Sound stops during a performance.

The function of this circuitry is to prevent circuitry damage if, for example, the positive and negative speaker connection wires are "shorted" , or if speaker systems with an impedance less than the indicated rated impedance of the amplifier are used.

If this occurs, follow the procedure outlined below:

1.Turn off the power.

2.Determine the cause of the problem and correct it.

3.Turn on the power once again.

Note:

When the protection circuitry functions, the unit will not operate unless the power is first turned off and then on again.

■ ACCESSORIES

● Stereo connection cable 1

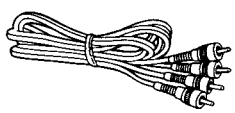

(SJPD18)

● AC power supply cord..... 1

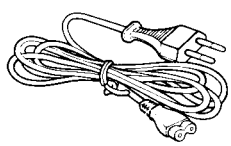

(SFDAC05E03)
for [E], [EG], [EI], [EH], [EB] and [EF] areas.

For United Kingdom and some areas,the power cord is directly attached to the unit.
Configuration of AC power supply cord differs according to area.

■ LOCATION OF CONTROLS

•Front

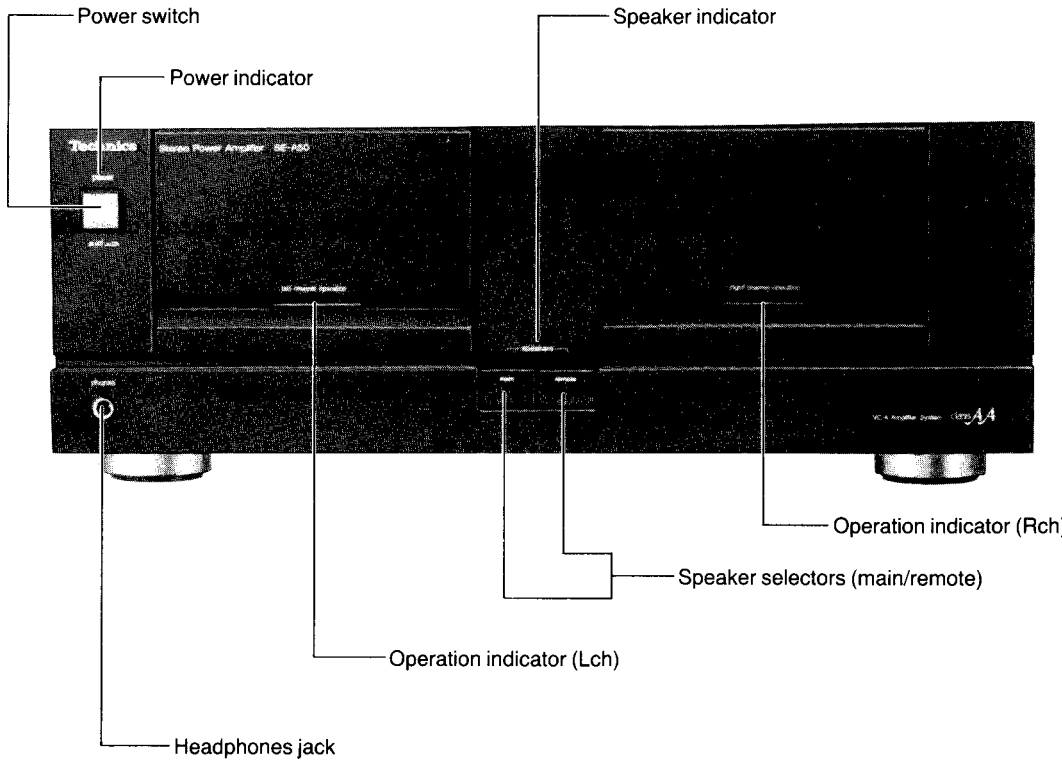

•Rear

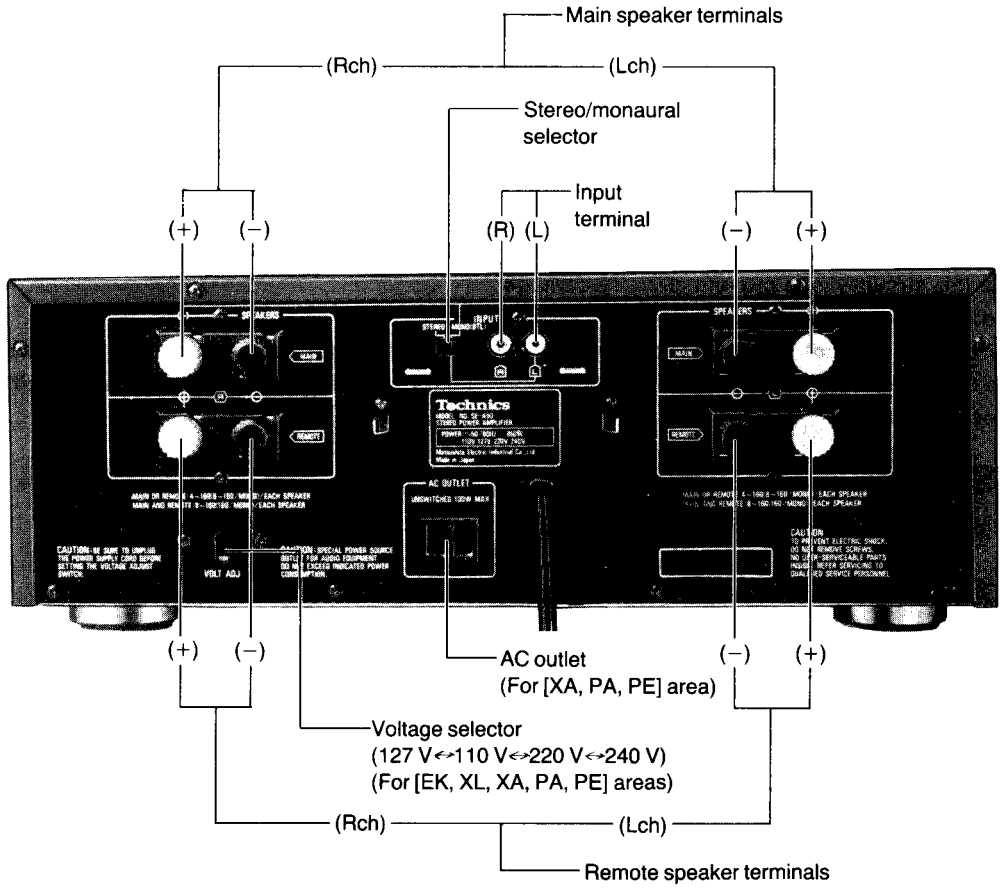

■ DISASSEMBLY INSTRUCTIONS

Ref. No. 1	How to remove the cabinet
Procedure 1	•Remove the 8 screws (❶~❽).

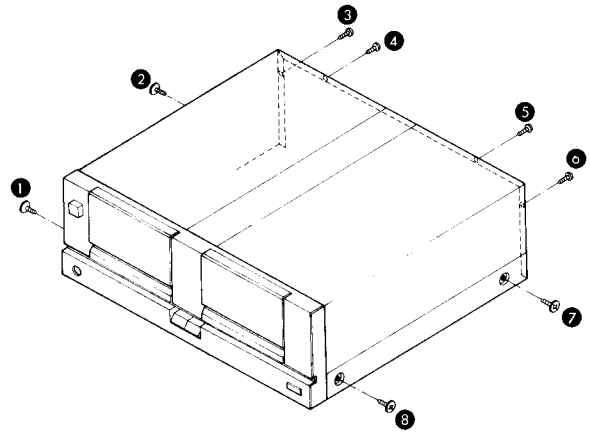

Ref. No. 2	How to remove the Input terminal P.C.B.
Procedure 1→2	1. Remove the 2 connectors (J1, J2). 2. Remove the 2 screws (❶, ❷).

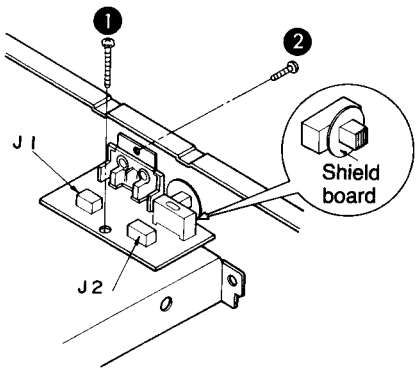

Ref. No. 3	How to remove the power switch P.C.B and LED P.C.B.
Procedure 1→3	1. Remove the power switch knob by pushing it from behind the front panel. 2. Remove the 2 screws (❶, ❷). 3. Remove the power switch P.C.B. 4. Release the 2 claws. 5. Remove the LED P.C.B.

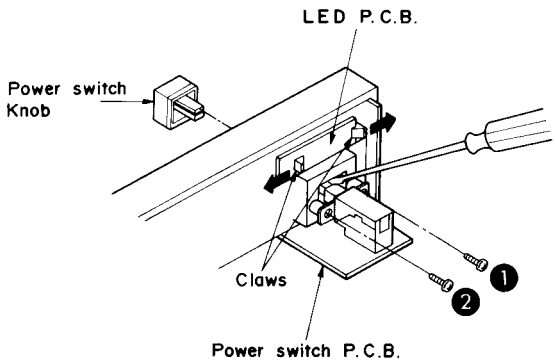

Ref. No. 4	How to remove the front panel
Procedure 1→4	1. Remove the 2 screws (❶, ❷) and remove the bracket. 2. Remove the 6 screws (❸~❽). 3. Remove the front panel in the direction of the arrow. 4. Pull out the 1 connector (J3). 5. Pull out the 2 flat cables (J4, J5).

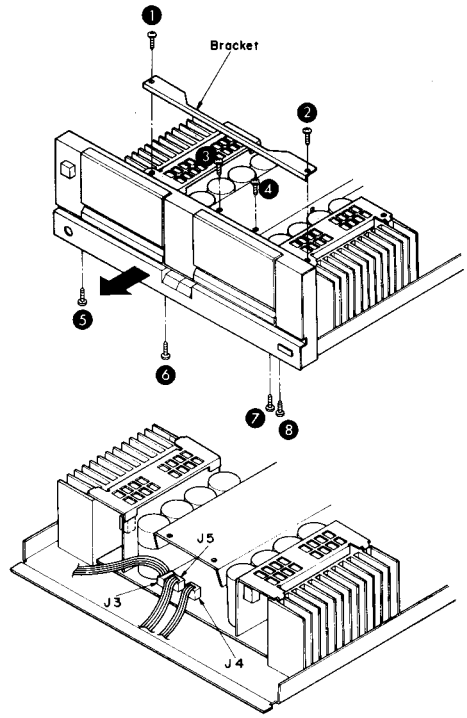

How to remove the flat cable

Pull out the flat cable while pressing the connector

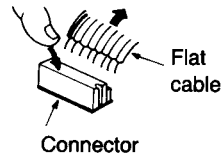

Ref. No. 5	How to remove the front shield case
Procedure 1→4→5	1. Remove the 5 screws (❶~❺). 2. Remove the front shield case in the direction of the arrow.

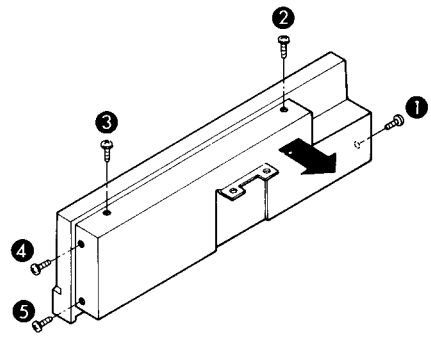

Ref. No. 6	How to remove the headphone P.C.B., speaker selector P.C.B. and lamp
Procedure 1→4→5→6	1. Release the 8 claws and remove the speaker selector P.C.B. 2. Remove the 1 screw (❶) and remove the headphone P.C.B. 3. Push the 8 claws and remove the 2 lamps (Lch, Rch).

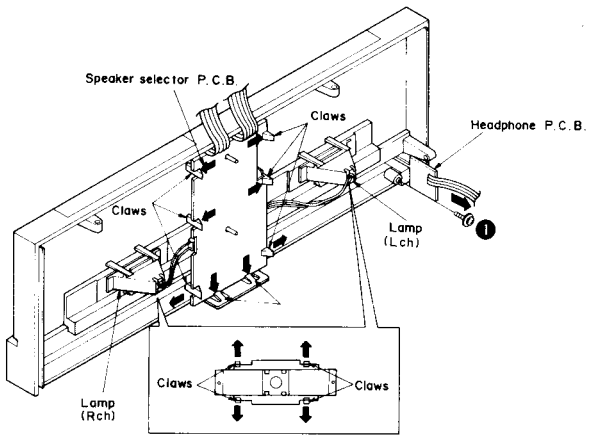

Ref. No. 7	How to remove the Shield cover
Procedure 1→2→7	1. Remove the 2 screws (❶, ❷) and remove the bracket. 2. Remove the cord clamper. 3. Remove the 4 screws (❸~❻). 4. Remove the shield cover in the direction of the arrow.

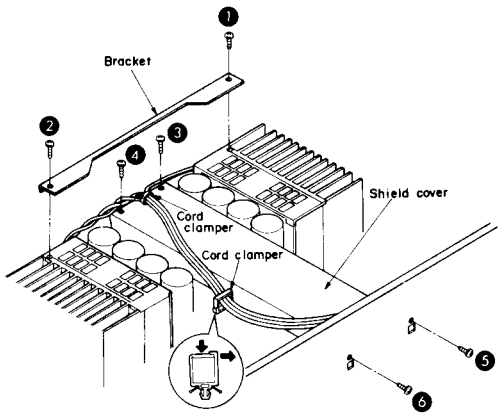

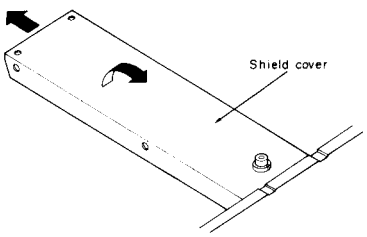

Ref. No. 8	How to remove the power source P.C.B
Procedure 1→2→7→8	1. Remove the cord clamper. 2. Remove the 3 screws (❶~❸). 3. Release the 2 claws and remove the power source P.C.B. in the direcion of the arrow.

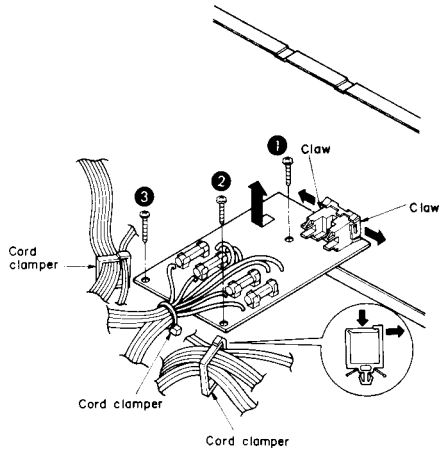

Ref. No. 9	How to remove the voltage selector P.C.B.
Procedure 1→2→7→9	•Remove the 2 screws (❶, ❷)

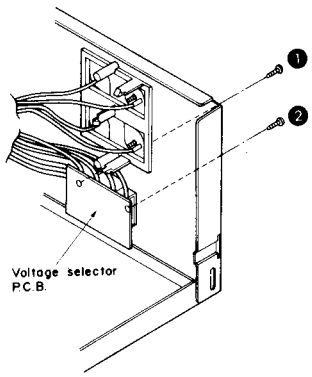

Ref. No. 10	How to remove the power transformer
Procedure 1→10	1. Remove the 4 nuts (❶~❹). 2. Remove the power transformer (Lch). 3. Remove the 4 nuts (❺~❽). 4. Remove the power transformer (Rch).

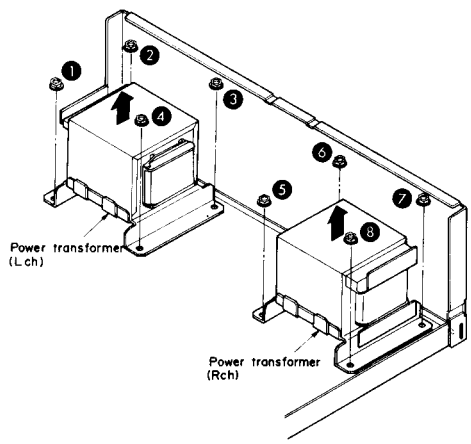

Ref. No. 11	How to remove the voltage control amp P.C.B.
Procedure 1→2→7→11	1. Remove the 1 screw (❶). 2. Remove the 2 nylone rivet (❷, ❸). 3. Remove the shield plate. 4. Pull out the voltage control amp P.C.B. (Lch) in the direction of the arrow. 5. Remove the 1 screw (❹). 6. Remove the 2 nylone rivet (❺, ❻). 7. Remove the shield plate. 8. Pull out the voltage control amp, P.C.B. (Rch) in the direction of the arrow.

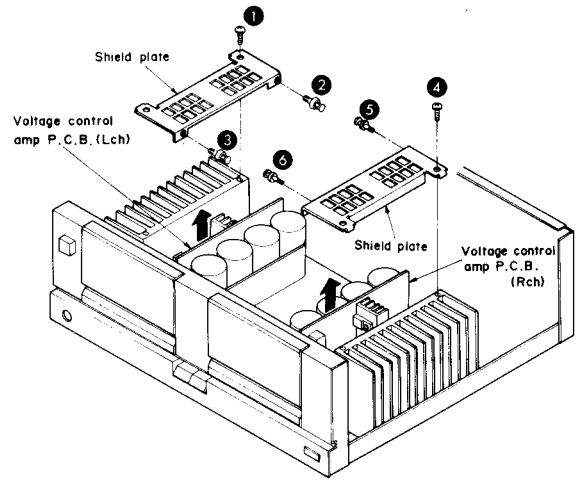

Ref. No. 12	How to remove the main P.C.B.
Procedure 1→2→7→11→12	1. Remove the 10 screws (❶~❿). 2. Remove the 4 nuts (⓫~⓮). 3. Pull out the 1 connector (J3). 4. Remove the 2 flat cables (J4, J5).

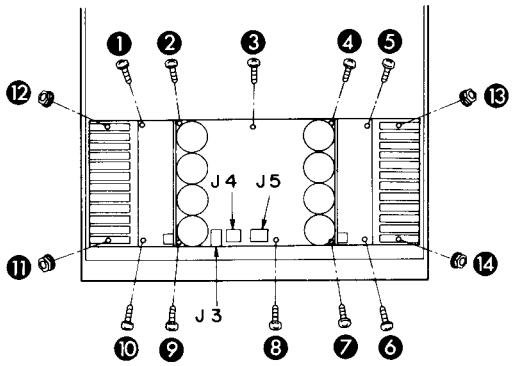

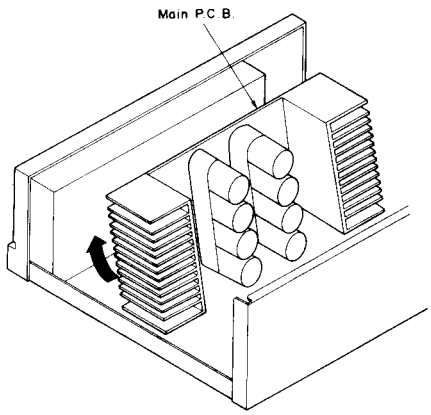

Ref. No. 13	How to remove the power transistor
Procedure 12→13	1. Unsolder the power transistor. 2. Remove the 4 screws (❶~❹). The figure below shows the power transistor on the right side. Remove the other transistor on the left in the same way.

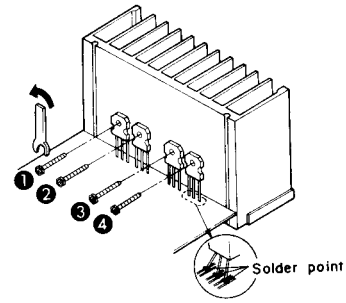

- When mounting the power transistor, apply silicon thermal compound (SZZ0L15) to the rear of the power transistor.

Ref. No. 14	How to remove the speaker terminal
Procedure 1→10→14	1. Remove the 2 screws (❶, ❷). 2. Remove the speaker terminal (Lch). 3. Remove the 2 screws (❸, ❹). 4. Remove the speaker terminal (Rch).

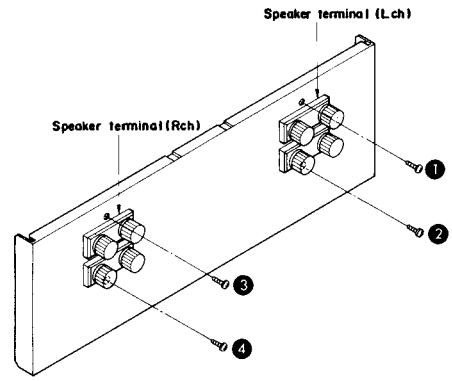

■ PRINTED CIRCUIT BOARDS

C VOLTAGE CONTROL AMP (Rch) P.C.B.

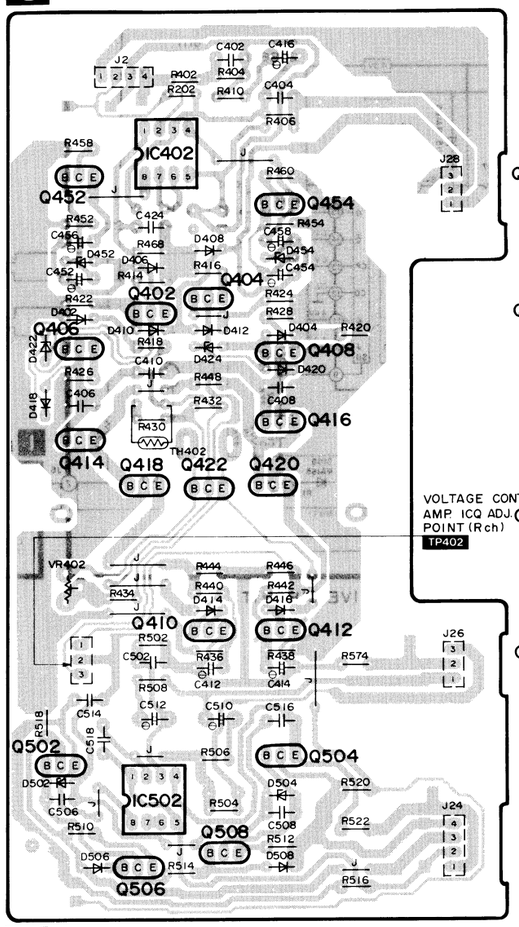

D CURRENT DRIVE AMP/ POWER AMP/ MUTING/PROTECTION/POWER SOURCE P.C.B.

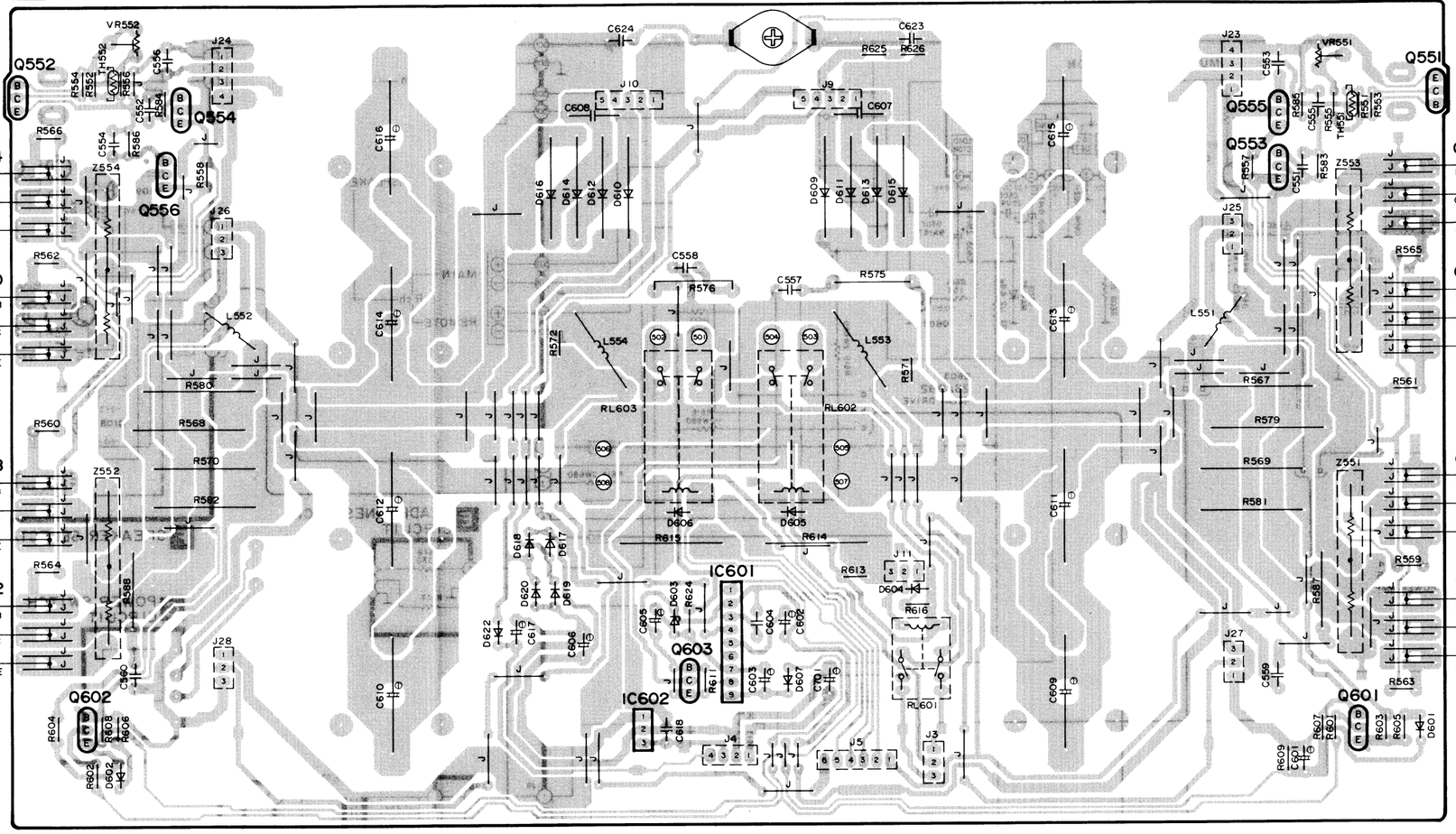

B VOLTAGE CO

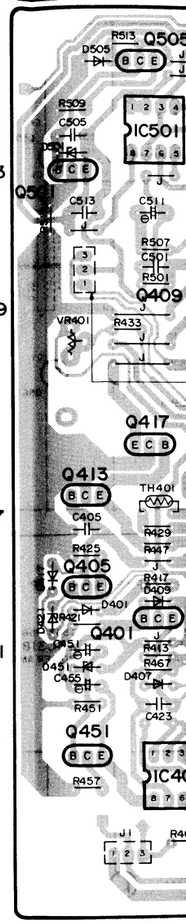

F SPEAKER SELECT/ RELAY DRIVE/ LED DRIVE P.C.B.

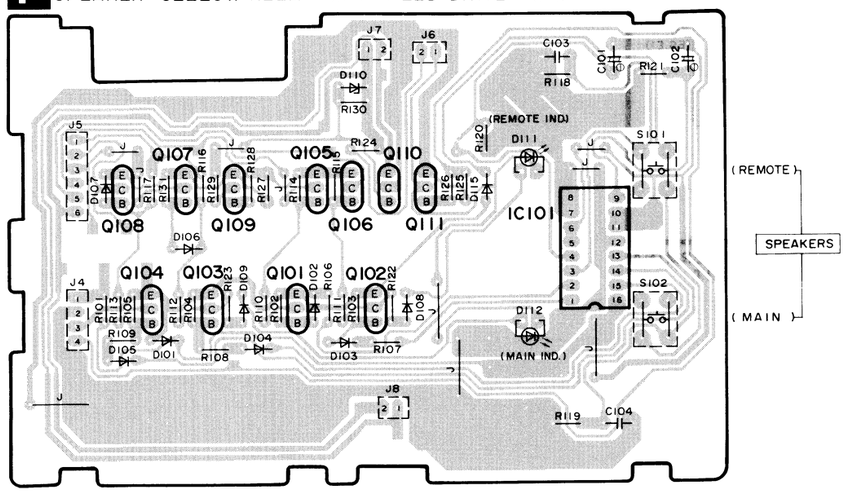

H AC IN TERMINAL P.C.B.

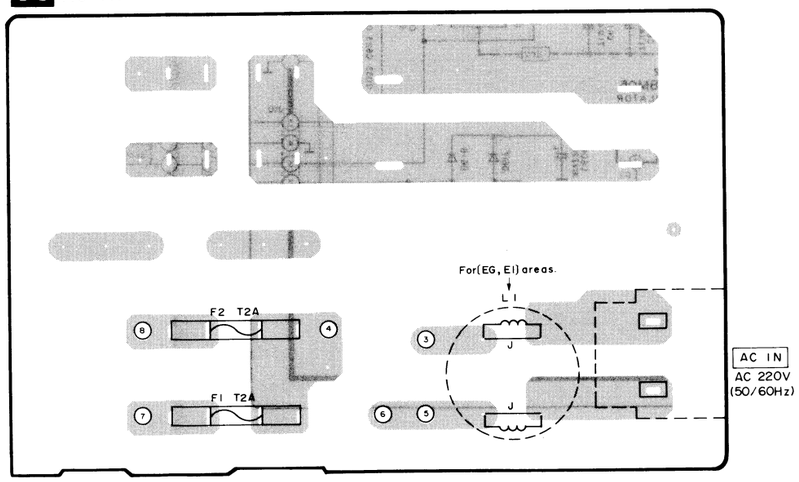

I LED P.C.B.

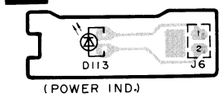

E HEADPHONES JACK P.C.B.

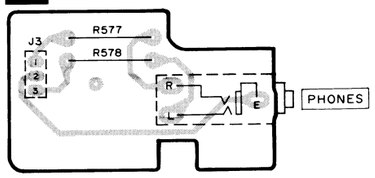

G POWER SWITC

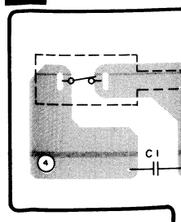

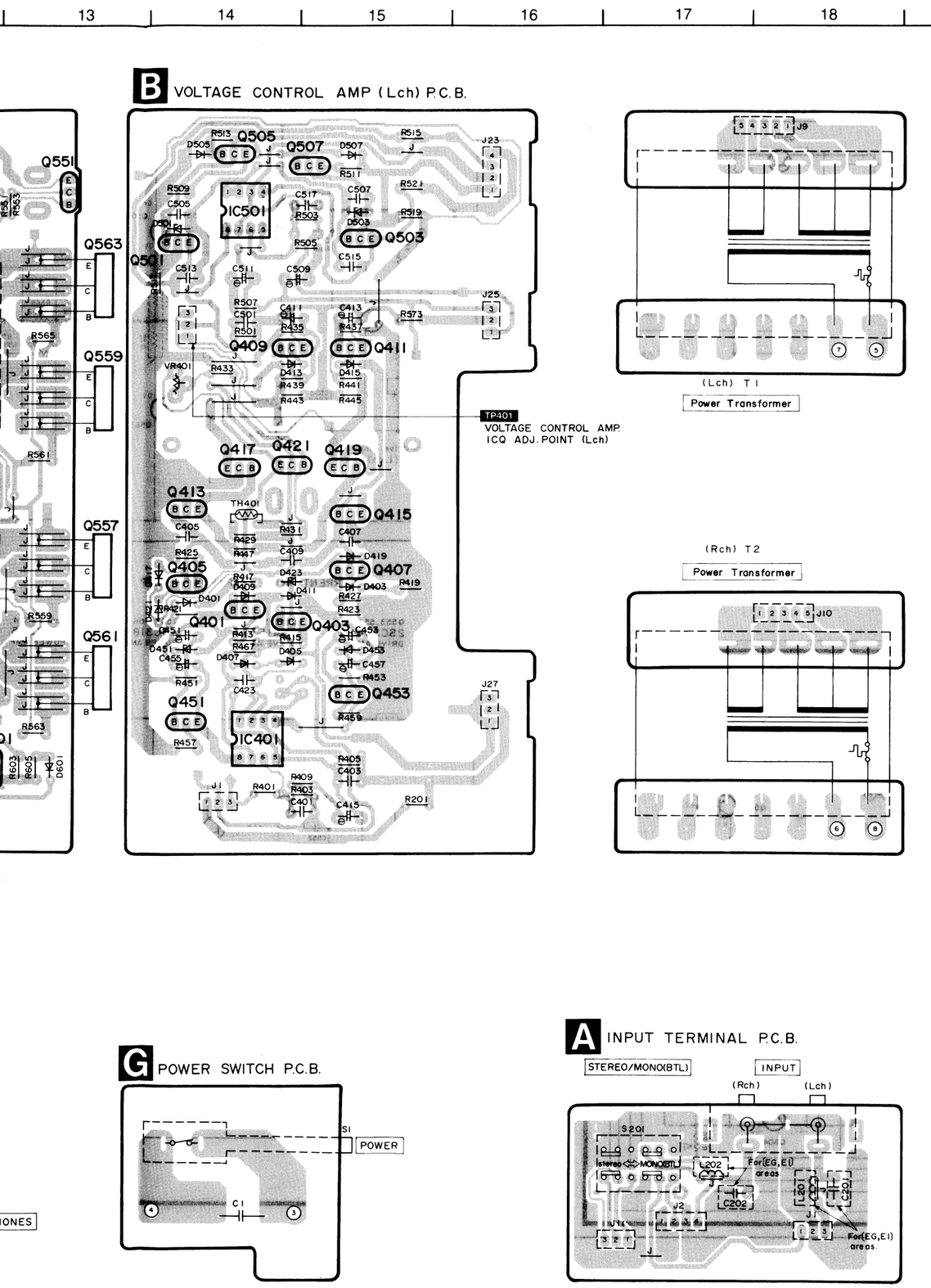

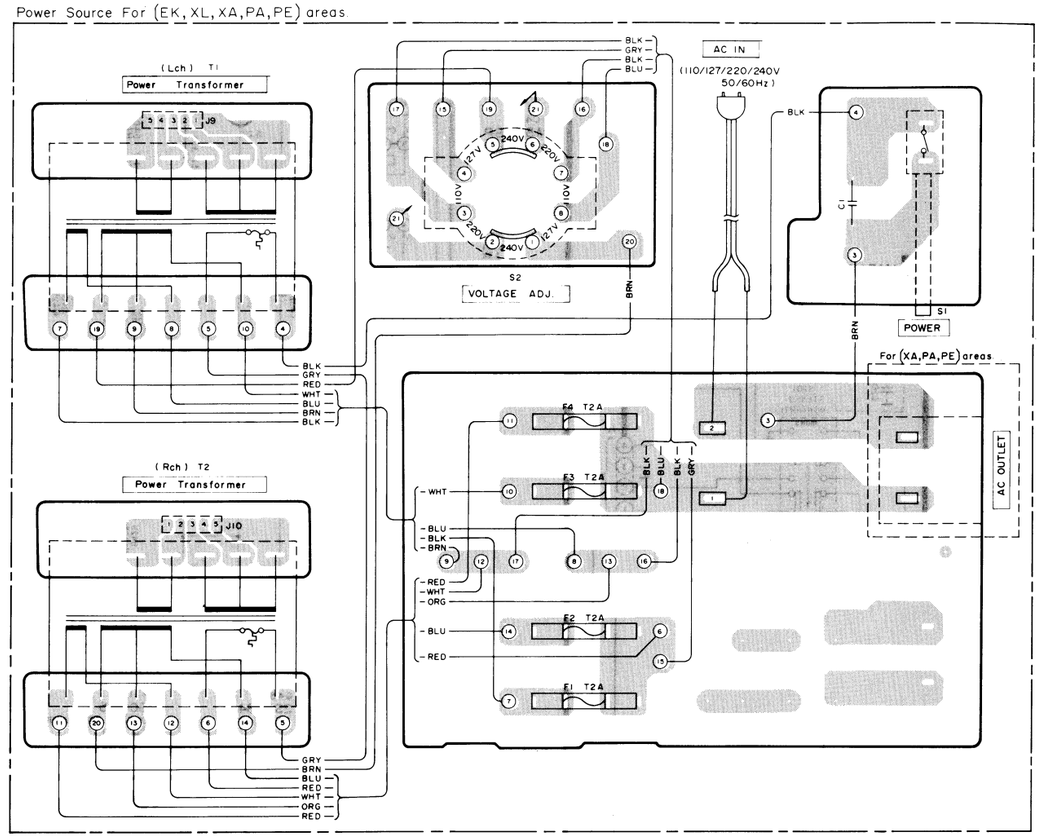

■ TERMINAL GUIDE OF TRANSISTORS, DIODES AND IC'S

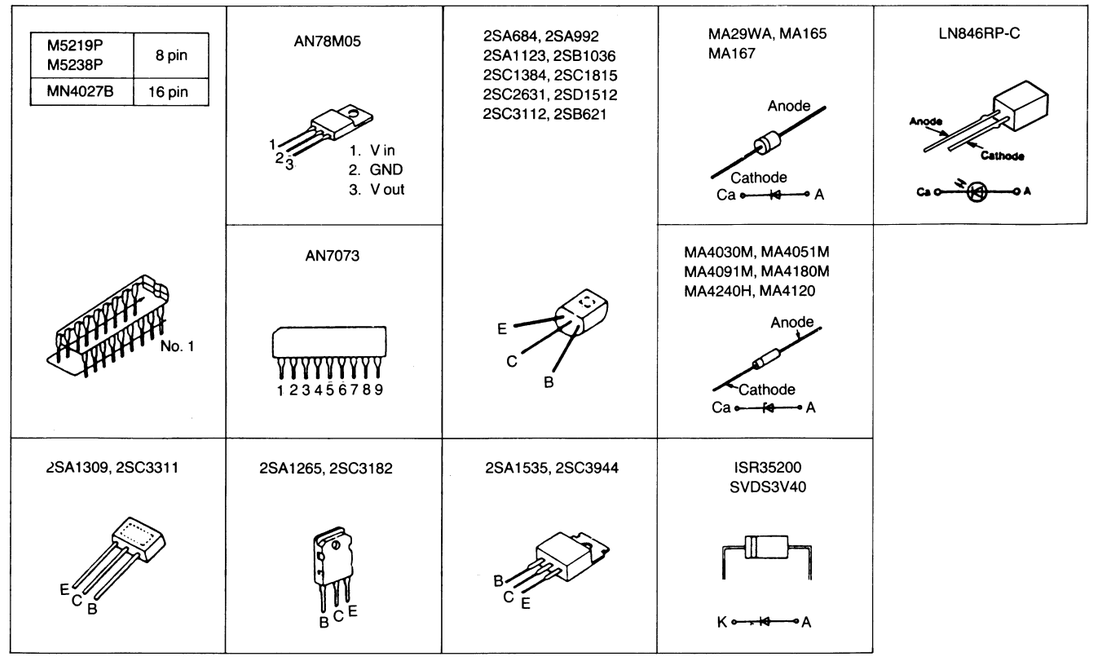

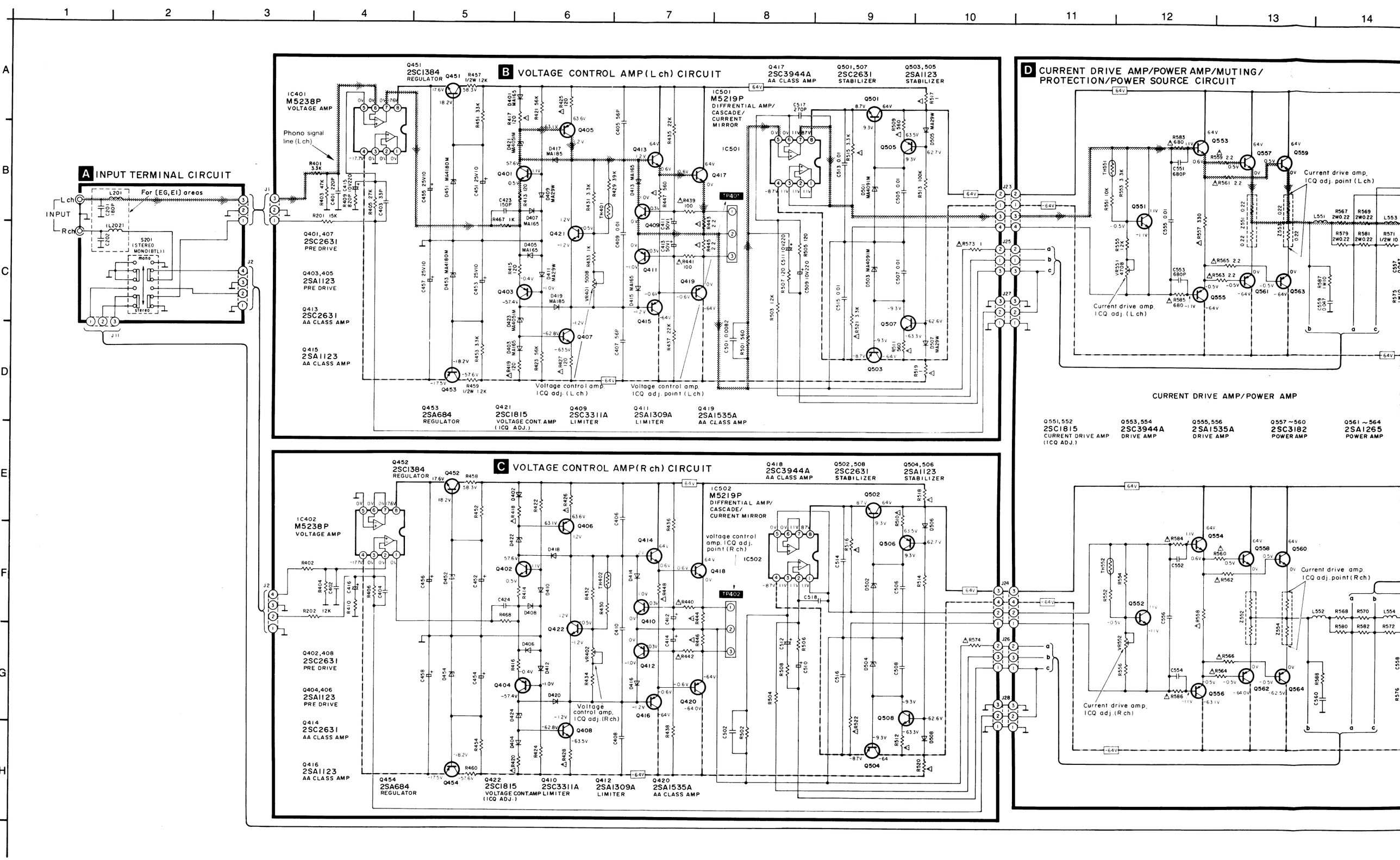
A INPUT TERMINAL CIRCUIT
B VOLTAGE CONTROL AMP(L ch) CIRCUIT
C VOLTAGE CONTROL AMP(R ch) CIRCUIT
D CURRENT DRIVE AMP/POWER AMP/MUTING/ PROTECTION/POWER SOURCE CIRCUIT
CURRENT DRIVE AMP/POWER AMP
IC401 M5238P VOLTAGE AMP
IC501 M5219P DIFFRENTIAL AMP/ CASCADE/ CURRENT MIRROR
IC402 M5238P VOLTAGE AMP
IC502 M5219P DIFFRENTIAL AMP/ CASCADE/ CURRENT MIRROR
Q451 2SC1384 REGULATOR
Q417 2SC3944A AA CLASS AMP
Q501,507 2SC2631 STABILIZER
Q503,505 2SA1123 STABILIZER
Q401,407 2SC2631 PRE DRIVE
Q403,405 2SA1123 PRE DRIVE
Q413 2SC2631 AA CLASS AMP
Q415 2SA1123 AA CLASS AMP
Q453 2SA684 REGULATOR
Q421 2SC1815 VOLTAGE CONT.AMP (ICQ ADJ.)
Q409 2SC3311A LIMITER
Q411 2SA1309A LIMITER
Q419 2SA1535A AA CLASS AMP
Voltage control amp. ICQ adj. (L ch)
Voltage control amp. ICQ adj. point (L ch)
Phono signal line (L ch)
INPUT
L ch
R ch
For (EG,EI) areas
S201 (STEREO MONO(BTL))
Q452 2SC1384 REGULATOR
Q418 2SC3944A AA CLASS AMP
Q502,508 2SC2631 STABILIZER
Q504,506 2SA1123 STABILIZER
Q402,408 2SC2631 PRE DRIVE
Q404,406 2SA1123 PRE DRIVE
Q414 2SC2631 AA CLASS AMP
Q416 2SA1123 AA CLASS AMP
Q454 2SA684 REGULATOR
Q422 2SC1815 VOLTAGE CONT.AMP (ICQ ADJ.)
Q410 2SC3311A LIMITER
Q412 2SA1309A LIMITER
Q420 2SA1535A AA CLASS AMP
Voltage control amp. ICQ adj. (R ch)
voltage control amp. ICQ adj. point (R ch)
Current drive amp. ICQ adj. point (L ch)
Current drive amp. ICQ adj. (L ch)
Current drive amp. ICQ adj. point (R ch)
Current drive amp. ICQ adj. (R ch)
Q551,552 2SC1815 CURRENT DRIVE AMP (ICQ ADJ.)
Q553,554 2SC3944A DRIVE AMP
Q555,556 2SA1535A DRIVE AMP
Q557~560 2SC3182 POWER AMP
Q561~564 2SA1265 POWER AMP

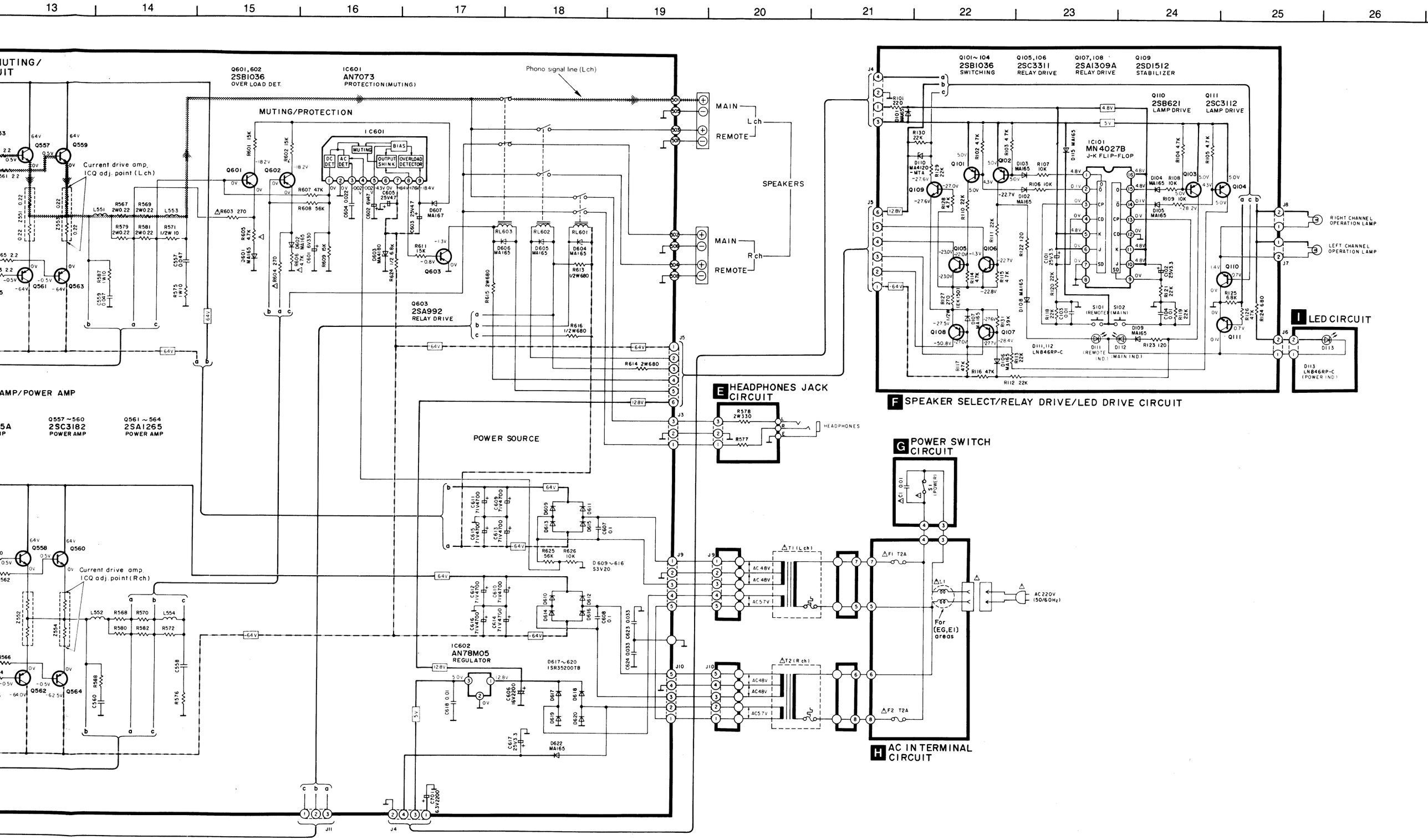
MUTING/
UIT
Q601,602
2SB1036
OVER LOAD DET.
IC601
AN7073
PROTECTION(MUTING)
Phono signal line (L ch)
MUTING/PROTECTION
IC601
MUTING
BIAS
DC DET
AC DET
OUTPUT SHINK
OVERLOAD DETECTOR
Current drive amp.
ICQ adj. point (L ch)
MAIN
L ch
REMOTE
SPEAKERS
MAIN
R ch
REMOTE
Q603
2SA992
RELAY DRIVE
AMP/POWER AMP
Q557~560
2SC3182
POWER AMP
Q561~564
2SA1265
POWER AMP
Current drive amp.
ICQ adj. point (R ch)
POWER SOURCE
IC602
AN78M05
REGULATOR
D617~620
1SR35200TB
D609~616
S3V20
E HEADPHONES JACK CIRCUIT
HEADPHONES
Q101~104
2SB1036
SWITCHING
Q105,106
2SC3311
RELAY DRIVE
Q107,108
2SA1309A
RELAY DRIVE
Q109
2SD1512
STABILIZER
Q110
2SB621
LAMP DRIVE
Q111
2SC3112
LAMP DRIVE
IC101
MN4027B
J-K FLIP-FLOP
RIGHT CHANNEL OPERATION LAMP
LEFT CHANNEL OPERATION LAMP
I LED CIRCUIT
F SPEAKER SELECT/RELAY DRIVE/LED DRIVE CIRCUIT
G POWER SWITCH CIRCUIT
AC 48V
AC 57V
T1 (L ch)
T2 (R ch)
F1 T2A
F2 T2A
AC220V (50/60Hz)
For (EG,EI) areas
H AC IN TERMINAL CIRCUIT

■ SCHEMATIC DIAGRAM

(This schematic diagram may be modified at any time with the development of new technology.)

Notes:

- S1 : Power switch in "on" position. (▙ off, ▟ on)
- S2 : Voltage selector switch in "240 V" position. (For [EK], [XL], [XA], [PA] and [PE] areas.)
- S101, S102 : Speaker selector switch in "Main" position. S101: Remote, S102: Main
- S201 : Stereo/monaural selector switch in "stereo" position.
- Indicated voltage values are the standard values for the unit measured by the DC electronic circuit tester (high-impedance) with the chassis taken as standard. Therefore, there may exist some errors in the voltage values, depending on the internal impedance of the DC circuit tester.
- Phono signal line (Lch).
  Positive voltage line.
  Negative voltage line.
- Important safety notice:
  Components identified by ⚠ mark have special characteristics important for safety. When replacing any of these components, use only manufacturer's specified parts.

Power Source For [EK, XL, XA, PA, PE] areas

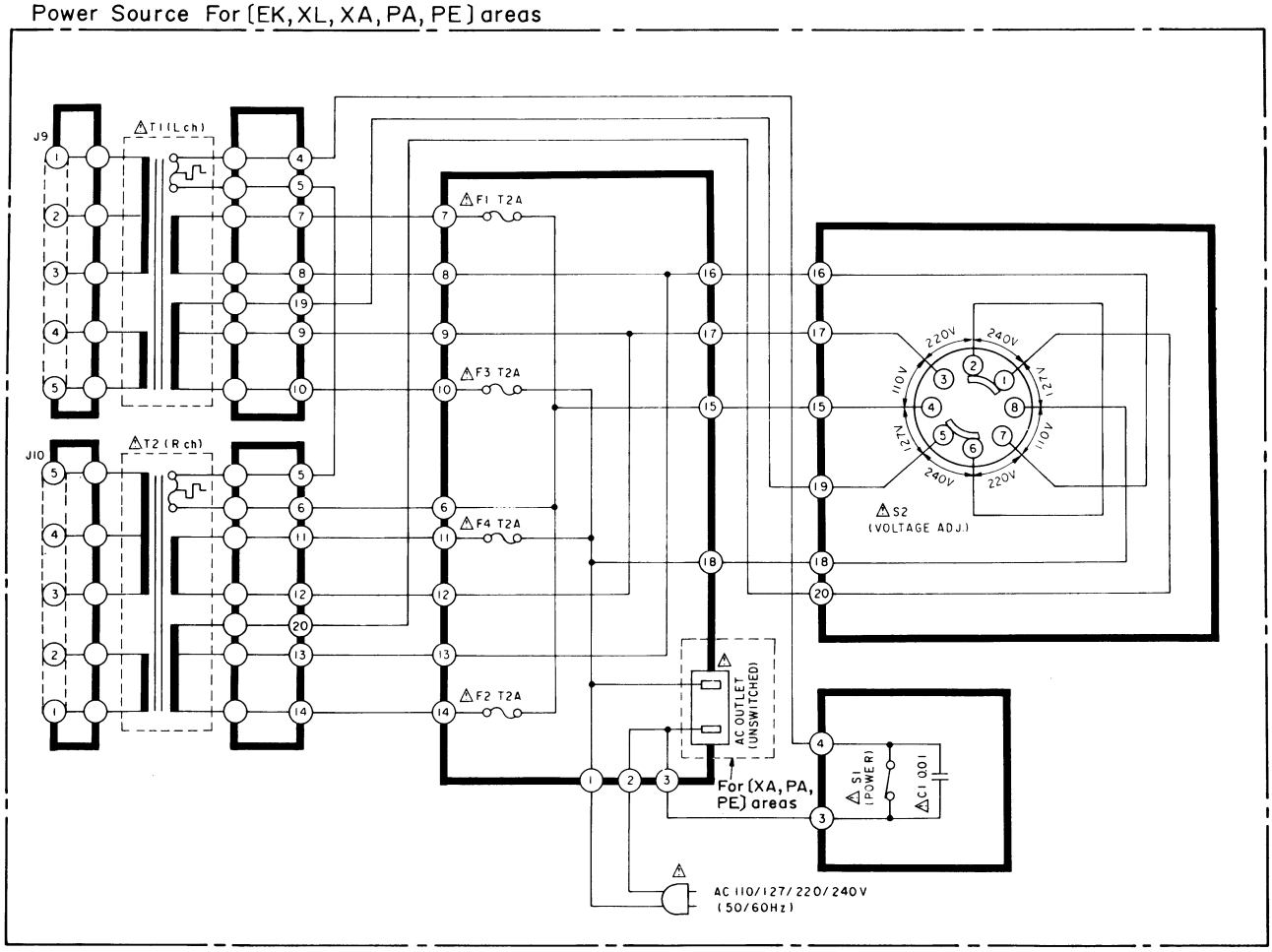

■ WIRING CONNECTION DIAGRAM

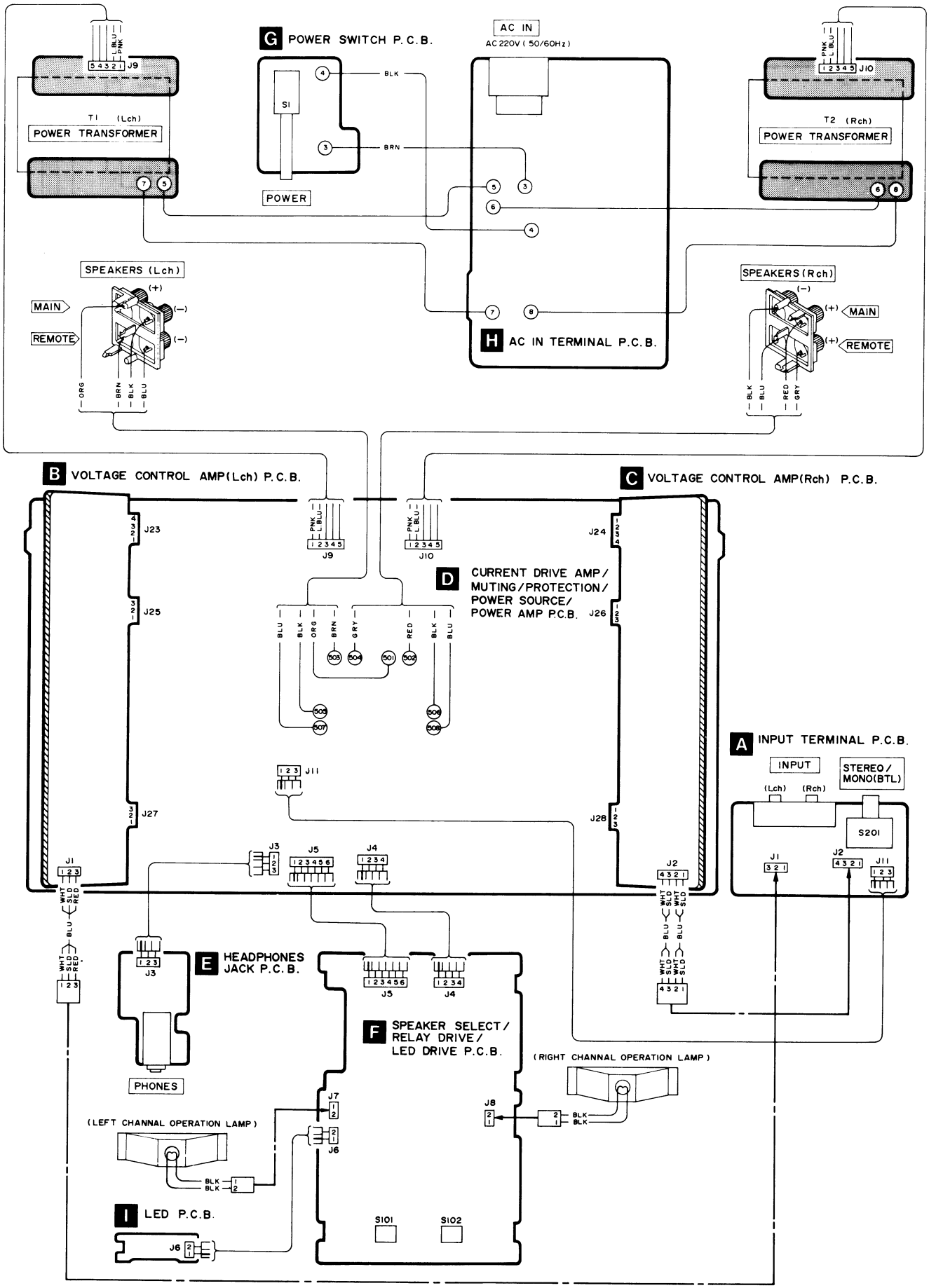

■ BLOCK DIAGRAM

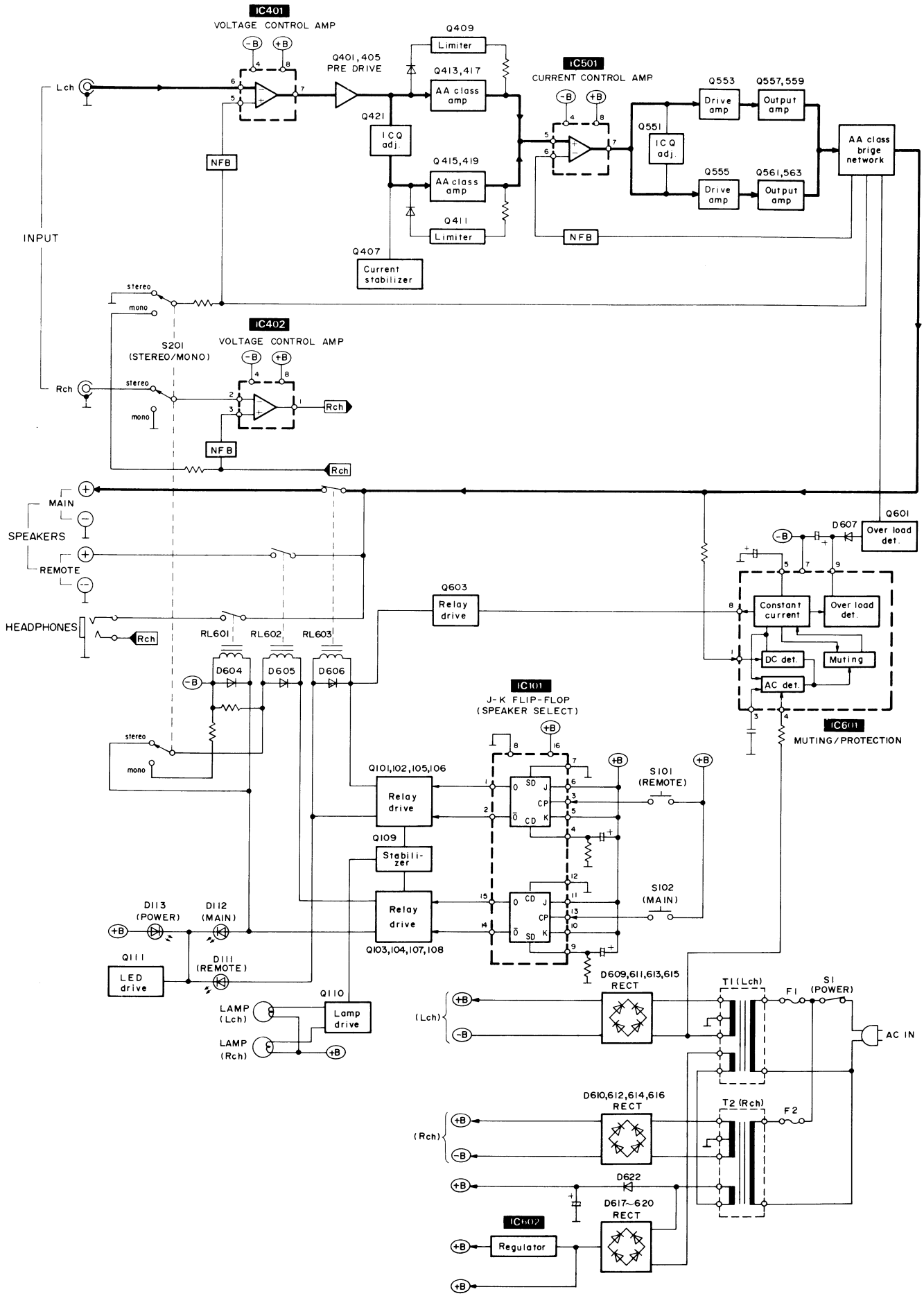

■ MEASUREMENTS AND ADJUSTMENTS

Control positions and equipment used.

- Main speaker selector.....off
- Remote speaker selector.....off
- DC electronic voltmeter(EVM)

VOLTAGE CONTROL(V)AMP.IDLING(ICQ) ADJUSTMENT

1. Test equipment connection is shown in figure. (Connect the DC EVM on both channels.)
2. Completely turn the (V) amp. adjusting volumes (**VR401 , VR402**) counter-clockwise.
3. Turn ON the set when it is cold, and immediately adjust **VR401** and **VR402** so that the voltage is **25mV.**
   Also, check that the voltage is **25 ~ 30mV** (standard: **27mV**) after lapse of **10 ~ 15 minutes.** (Below **30mV** after lapse of **20 min.**)

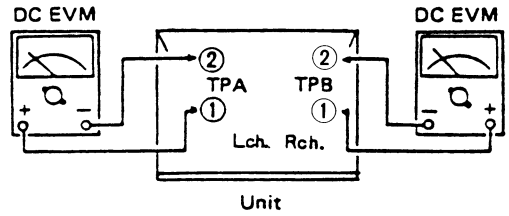

TPA=TP401, TPB=TP402

CURRENT DRIVE(C)AMP.IDLING(ICQ)ADJUSTMENT

1. Test equipment connection is shown in figure. (Connect the DC EVM on both channels.)
2. Completely turn the (C) amp. adjusting volumes (**VR551 , VR552**) counter-clockwise.
3. Turn ON the set when it is cold, and after the adjustment of the (V) amp. ICQ, adjust **VR551** and **VR552** so that the voltage is **3mV.**
   Also, check that the voltage is **4 ~ 7mV** (standard: **5mV**) after lapse of **10 ~ 15 minutes.** (Below **10mV** after lapse of **20 min.**)

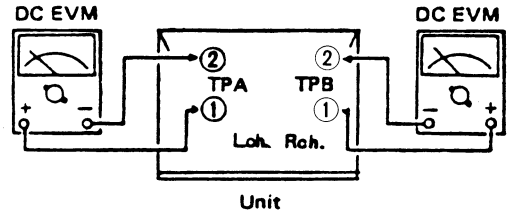

TPA=Z551, TPB=Z552

●ADJUSTMENT POINTS

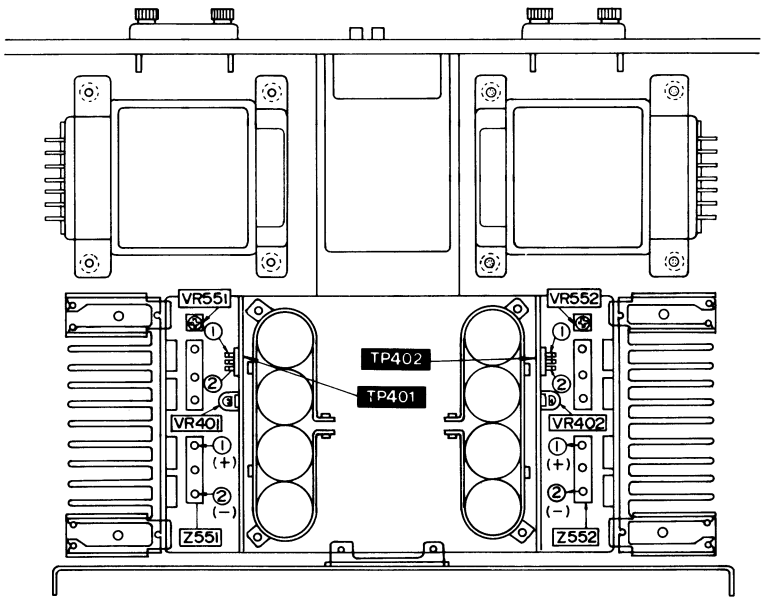

●Test point

TP401 .... L ch Voltage control amp Icq adj.
TP402 .... R ch Voltage control amp Icq adj.
Z551 .... L ch Current drive amp Icq adj.
Z552 .... R ch Current drive amp Icq adj.

●Adjustment VR

VR401 .... L ch Voltage control amp Icq adj.
VR402 .... R ch Voltage control amp Icq adj.
VR551 .... L ch Current drive amp Icq adj.
VR552 .... R ch Current drive amp Icq adj.

■ EXPLODED VIEW

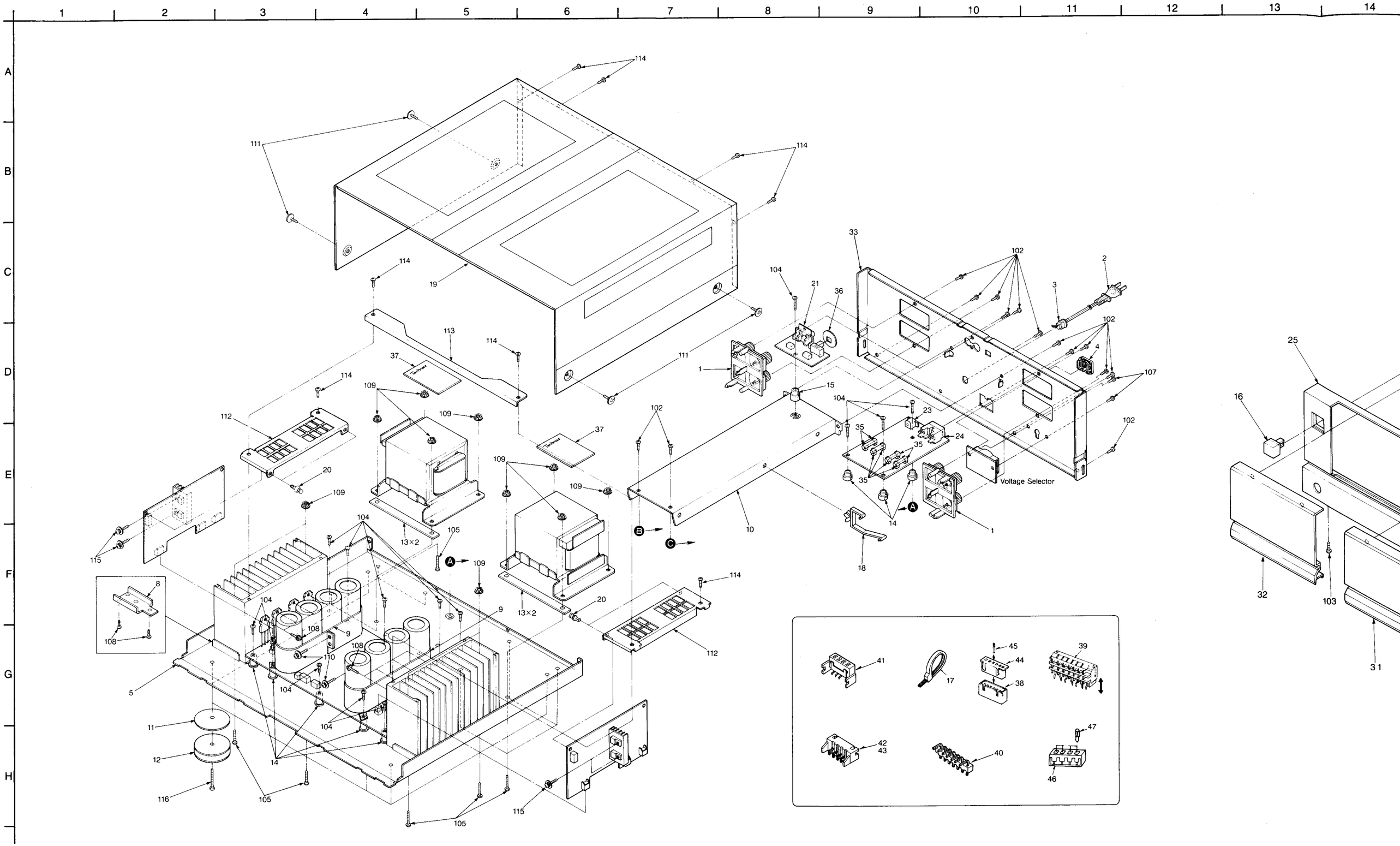

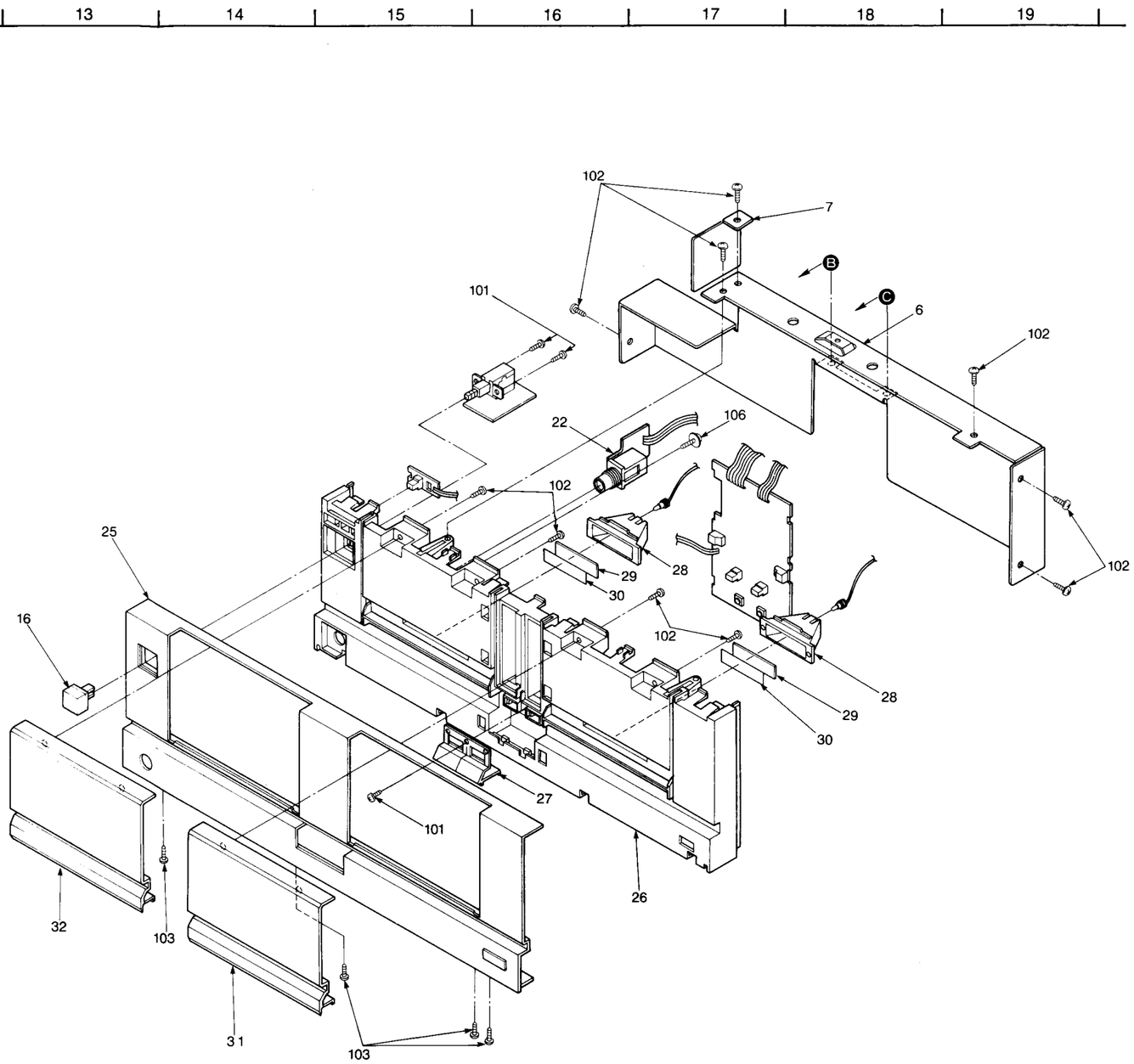

■ REPLACEMENT PARTS LIST

Notes: *Important safety notice:
Components identified by ⚠ mark have special characteristics important for safety. When replacing any of these components use only manufacturer's specified parts.
*Bracketed indications in Ref. No. columns specify the area. (Refer to the first page for area.)
Parts without these indications can be used for all areas.

●CABINET PARTS

Ref. No.	Part No.	Description
CABINET AND CHASSIS		
1	SJF4443	TERMINAL PLATE
2 ⚠ (EK)	QFC1205M	POWER CORD
2 ⚠ (XA, PA, PE)	SJA121	POWER CORD
2 ⚠ (XL)	SJA190	POWER CORD
3 (XL, XA, PA) (PE)	SHR127	SPACER, POWER CORD
3 (EK)	SHR129	BUSHING
4 (XA, PA, PE)	SJS9330A	OUTLET COVER
5	SKU11830-1	PLATE
6	SMC6451-1	SHIELD COVER
7	SMC6452	SHIELD COVER
8	SUW3099	BRACKET
9	SMN2059	ANGLE
10	SMN2085	ANGLE
11	SHG6405	SPACER
12	SKL306	INSULATER
13	SHG6411	RUBBER SPACER
14	SHE181	HOLDER
15	SHE185-1	SPACER
16	SBC666-5	BUTTON, POWER
17	SHR301	CLAMPER
18	SHR9814	PLASTIC SPACER
19	SKC2180K10	CABINET BODY
20	SHR415	LOCK PIN
21	SJFD4-1	TERMINAL PLATE
22	SJJD17B	JACK
23 ⚠ (E, EG, EI, EH) (EB, EF)	SJS9236	AC INLET
24 ⚠ (XA, PA, PE)	SJS9330B	AC OUTLET
25	SGWEA50-KE1	FRONT PANEL
26	SGX7980	ORNAMENT
27	SBC1026	BUTTON
28	SMP388-1	ANGLE
29	SDU268	GALSS,TRANSPARENT PLATE
30	SDU358	FILTER (W)
31	SGWEA50-KE2	SUB PANEL(R)
32	SGWEA50-KE3	SUB PANEL(L)
33 (EI, EH, EB)	SGPEA50-KH	REAR PANEL
(EF) 33	SGP7380-1A	REAR PANEL
(EK) 33	SGP7380-1B	REAR PANEL
(XL) 33	SGP7380-2A	REAR PANEL
(XA, PA, PE) 33	SGP7380A	REAR PANEL
(E) 33	SGP7380B	REAR PANEL
(EG) 35	SJT390	FUSE HOLDER
36	SHR6079	HOLDER
37	SGK2175	INDICATION PLATE
38	SJT3319	CONNECTOR(3P)
38	SJT3415	CONNECTOR(4P)
39	SJT30440LX-V	CONNECTOR(4P)
39	SJT30640LX-V	CONNECTOR(6P)
40	SJT30339MB	LUG TERMINAL
41	SJS50378JQ	CONNECTOR (3P, J25~J28)
41	SJS50478JQ	CONNECTOR (4P, J23, 24)
42	SJT30345JQ	TERMINAL (3P, J25~J28)
42	SJT30445JQ	CONNECTOR (4P, J23, 24)
43	SJT3215	CONNECTOR(2P)
44	SJS5215	SOCKET(2P)
44	SJS5331	SOCKET(3P)
44	SJS5425	SOCKET(4P)
45	SJT783	CONTACT
46	SJS5337	CONNECTOR(3P)
46	SJS5431	SOCKET(4P)
47	SJT785	CONTACT
SCREWS,WASHERS AND NUTS		
101	XTB3+8G	SCREW
102	XTBS3+8JFZ1	SCREW
103	XTBS3+10JFZ1	TAPPING SCREW
104	XTB3+20J	SCREW
105	XTB4+12FFZ	TAPPING SCREW
106	XTWS3+10Q	SCREW
107	XYN3+C6FZ	SCREW
108	SNE2117-1	SCREW
109	SNE4065	BRACKET
110	XYN3+F14	TAPPING SCREW
111	SNE2129-3	SCREW
112	SMN2060-1	ANGLE
113	SMN2086	ANGLE
114	XTBS3+8JFZ1	SCREW
115	XYN3+F8	SCREW
116	XTB4+12A	SCREW

●ELECTRICAL PARTS

Ref. No.	Part No.	Description
INTEGRATED CIRCUITS		
IC101	MN4027B	I.C. SP/SELECT
IC401	M5238P	I.C. CONTROL AMP
IC402	M5238P	I.C. CONTROL AMP
IC501	M5219P	I.C. CASCADE AMP
IC502	M5219P	I.C. CASCADE AMP
IC601	AN7073	I.C. PROTECTION
IC602	AN78M05	I.C. REGULATOR
TRANSISTORS		
Q101	2SB1036R	TRANSISTOR
Q102	2SB1036R	TRANSISTOR
Q103	2SB1036R	TRANSISTOR
Q104	2SB1036R	TRANSISTOR
Q105	2SC3311A-Q	TRANSISTOR
Q106	2SC3311A-Q	TRANSISTOR
Q107	2SA1309AQS	TRANSISTOR
Q108	2SA1309AQS	TRANSISTOR
Q109	2SD1512R	TRANSISTOR
Q110	2SB621A-R	TRANSISTOR
Q111	2SC3112	TRANSISTOR
Q401	2SC2631-Q	TRANSISTOR
Q402	2SC2631-Q	TRANSISTOR
Q403	2SA1123R	TRANSISTOR
Q404	2SA1123R	TRANSISTOR
Q405	2SA1123R	TRANSISTOR
Q406	2SA1123R	TRANSISTOR
Q407	2SC2631-Q	TRANSISTOR
Q408	2SC2631-Q	TRANSISTOR
Q409	2SC3311A-Q	TRANSISTOR
Q410	2SC3311A-Q	TRANSISTOR
Q411	2SA1309AQS	TRANSISTOR
Q412	2SA1309AQS	TRANSISTOR
Q413	2SC2631-Q	TRANSISTOR
Q414	2SC2631-Q	TRANSISTOR
Q415	2SA1123R	TRANSISTOR
Q416	2SA1123R	TRANSISTOR
Q417	2SC3944AQRS	TRANSISTOR
Q418	2SC3944AQRS	TRANSISTOR
Q419	2SA1535AQRS	TRANSISTOR
Q420	2SA1535AQRS	TRANSISTOR
Q421	2SC1815BG	TRANSISTOR, SI
Q422	2SC1815BG	TRANSISTOR, SI
Q451	2SC1384A-R	TRANSISTOR
Q452	2SC1384A-R	TRANSISTOR
Q453	2SA684-RNC	TRANSISTOR
Q454	2SA684-RNC	TRANSISTOR
Q501	2SC2631-Q	TRANSISTOR
Q502	2SC2631-Q	TRANSISTOR
Q503	2SA1123R	TRANSISTOR
Q504	2SA1123R	TRANSISTOR
Q505	2SA1123R	TRANSISTOR
Q506	2SA1123R	TRANSISTOR
Q507	2SC2631-Q	TRANSISTOR
Q508	2SC2631-Q	TRANSISTOR
Q551	2SC1815BG	TRANSISTOR, SI
Q552	2SC1815BG	TRANSISTOR, SI
Q553	2SC3944AQRS	TRANSISTOR
Q554	2SC3944AQRS	TRANSISTOR
Q555	2SA1535AQRS	TRANSISTOR
Q556	2SA1535AQRS	TRANSISTOR
Q557 ⚠	2SC3182R	TRANSISTOR, SI
Q558 ⚠	2SC3182R	TRANSISTOR, SI
Q559 ⚠	2SC3182R	TRANSISTOR, SI
Q560 ⚠	2SC3182R	TRANSISTOR, SI
Q561 ⚠	2SA1265R	TRANSISTOR, SI
Q562 ⚠	2SA1265R	TRANSISTOR, SI
Q563 ⚠	2SA1265R	TRANSISTOR, SI
Q564 ⚠	2SA1265R	TRANSISTOR, SI
Q601	2SB1036R	TRANSISTOR
Q602	2SB1036R	TRANSISTOR
Q603	2SA992E	TRANSISTOR

Ref. No.	Part No.	Description
DIODES		
D101	MA165	DIODE
D102	MA165	DIODE
D103	MA165	DIODE
D104	MA165	DIODE
D105	MA165	DIODE
D106	MA165	DIODE
D107	MA165	DIODE
D108	MA165	DIODE
D109	MA165	DIODE
D110	MA4120	DIODE
D111	LN846RP-C	L.E.D
D112	LN846RP-C	L.E.D
D113	LN846RP-C	L.E.D
D115	MA165	DIODE
D401	MA165	DIODE
D402	MA165	DIODE
D403	MA165	DIODE
D404	MA165	DIODE
D405	MA165	DIODE
D406	MA165	DIODE
D407	MA165	DIODE
D408	MA165	DIODE
D409	MA29WA	DIODE
D410	MA29WA	DIODE
D411	MA29WA	DIODE
D412	MA29WA	DIODE
D413	MA165	DIODE
D414	MA165	DIODE
D415	MA165	DIODE
D416	MA165	DIODE
D417	MA185	DIODE, SI
D418	MA185	DIODE, SI
D419	MA185	DIODE, SI
D420	MA185	DIODE, SI
D421	MA4051-M	DIODE
D422	MA4051-M	DIODE
D423	MA4051-M	DIODE
D424	MA4051-M	DIODE
D451	MA4180-M	DIODE
D452	MA4180-M	DIODE
D453	MA4180-M	DIODE
D454	MA4180-M	DIODE
D501	MA4091-M	DIODE
D502	MA4091-M	DIODE
D503	MA4091-M	DIODE
D504	MA4091-M	DIODE
D505	MA29WA	DIODE
D506	MA29WA	DIODE
D507	MA29WA	DIODE
D508	MA29WA	DIODE
D601	MA165	DIODE
D602	MA165	DIODE
D603	MA4180-M	DIODE
D604	MA165	DIODE
D605	MA165	DIODE
D606	MA165	DIODE
D607	MA167	DIODE
D609 ⚠	SVDS3V40	RECTIFIER
D610 ⚠	SVDS3V40	RECTIFIER
D611 ⚠	SVDS3V40	RECTIFIER
D612 ⚠	SVDS3V40	RECTIFIER
D613 ⚠	SVDS3V40	RECTIFIER
D614 ⚠	SVDS3V40	RECTIFIER
D615 ⚠	SVDS3V40	RECTIFIER
D616 ⚠	SVDS3V40	RECTIFIER
D617 ⚠	SVD1SR35200A	RECTIFIER
D618 ⚠	SVD1SR35200A	RECTIFIER
D619 ⚠	SVD1SR35200A	RECTIFIER
D620 ⚠	SVD1SR35200A	RECTIFIER
D622	MA165	DIODE

Ref. No.	Part No.	Description
VARIABLE RESISTORS		
VR401	EVNK0AA00B52	SEMI FIXED RESISTOR, V CONTROL
VR402	EVNK0AA00B52	SEMI FIXED RESISTOR, V CONTROL
VR551	QVNB3A00B471	SEMI FIXED RESISTOR, C CONTROL
VR552	QVNB3A00B471	SEMI FIXED RESISTOR, C CONTROL
THERMISTORS AND VARISTORS		
TH401	ERTD2WHL104S	THERMISTOR
TH402	ERTD2WHL104S	THERMISTOR
TH551	ERTD2WHL104S	THERMISTOR
TH552	ERTD2WHL104S	THERMISTOR
COILS AND TRANSFORMERS		
L1 (EG, EI)	SLQZ650MH49	CHOKE COIL
L201 (EG, EI)	ELEPH4R7KA	COIL
L202 (EG, EI)	ELEPH4R7KA	COIL
L551	SLQY07G-50	COIL
L552	SLQY07G-50	COIL
L553	SLQY18G-20	COIL
L554	SLQY18G-20	COIL
T1 ⚠ (E, EG, EI, EH) (EB, EF)	SLT5N477	POWER TRANSFORMER
T1 ⚠ (XL, XA, PA) (PE)	SLT5N478	POWER TRANSFORMER
T1 ⚠ (EK)	SLT5N479	POWER TRANSFORMER
T2 ⚠ (XL, XA, PA) (PE)	SLT5N478	POWER TRANSFORMER
T2 ⚠ (EK) (E, EG, EI, EH) (EB, EF)	SLT5N479	POWER TRANSFORMER
COMPONENT COMBINATIONS		
Z551	ERF3GBKR22N	WIRE WOUND RESISTOR
Z552	ERF3GBKR22N	WIRE WOUND RESISTOR
Z553	ERF3GBKR22N	WIRE WOUND RESISTOR
Z554	ERF3GBKR22N	WIRE WOUND RESISTOR
LAMPS		
PL1 ⚠	XAMS12S500	PILOT LAMP
FUSES		
F1 ⚠	XBA2C20TB0	FUSE 250V, T2A
F2 ⚠	XBA2C20TB0	FUSE 250V, T2A
F3 ⚠ (XL, XA, PA) (PE, EK)	XBA2C20TB0	FUSE 250V, T2A
F4 ⚠ (XL, XA, PA) (PE, EK)	XBA2C20TB0	FUSE 250V, T2A
SWITCHES		
S1 ⚠	SSH1201	SW, POWER
S2 ⚠ (EK, XL, XA) (PA, PE)	ESE37263	SW, V.SELECT
S101	SSG13	SW
S102	SSG13	SW
S201	RSS42A	SWITCH
RELAYS		
RL601	SFDYG5A237P	RELAY
RL602	SSY126	RELAY
RL603	SSY126	RELAY

•PACKING PARTS

Ref. No.	Part No.	Description
PACKING MATERIAL		
P1 (E, EG, EK, XL) (XA, PA, PE) (EI, EH, EB)	SPG6235	CARTON BOX
P1 (EF)	SPG6240	PACKING CASE
P2	SPS5133	PAD
P3	SPS5134	PAD
P4	SPS5135	PAD
P5	SPS5136	PAD
P6	SPS5051	PAD
P7	SPH6438	PACKING SHEET
P8 (XL, XA, PA) (PE)	SPB1073	POLYETHYLENE BAG
ACCESSORIES		
A1 ⚠ (XA, PA, PE)	RJP120ZBS-H	AC PLUG ADAPTOR
A2	SJPD18	OUTPUT CORD
A3	SPB1035	ACCESSORY BAG
A4 ⚠ (E, EG, EI, EH) (EB, EF)	SFDAC05E03	POWER CORD
A5 (XA)	SQF13206	INSTRUCTION BOOK
A5 (E, EI, EH, EB) (EF)	SQF13207	INSTRUCTION BOOK
A5 (EG)	SQF13208	INSTRUCTION BOOK
A5 (XL)	SQF13209	INSTRUCTION BOOK
A5 (PA, PE)	SQF13210	INSTRUCTION BOOK
A5 (EK)	SQF13324	INSTRUCTION BOOK

■ RESISTORS & CAPACITORS

Notes : * Important safety notice :
Components identified by ⚠ mark have special characteristics important for safety. When replacing any of these components use only manufacturer's specified parts.
* Bracketed indications in Ref. No. columns specify the area. (Refer to the first page for area.)
Parts without these indications can be used for all areas.

Numbering System of Resistor

Example:

ERD	25	F	J	102
Type	Wattage (1/4W)	Shape	Tolerance	Value (1KΩ)
ERX	2	AN	J	471
Type	Wattage (2W)	Shape	Tolerance	Value (470Ω)

Numbering System of Capacitor

Example:

ECKD	1H	102	Z	F
Type	Voltage (50V)	Value (0.001μF)	Tolerance	Peculiarity
ECEA	50	M	330	
Type	Voltage (50V)	Pecliarity	Value (33μF)	

● Capacity are in microfarads (μF) unless specified otherwise, P = Pico-farads (pF) F = Farads (F).
● Resistance are in ohms (Ω), unless specified otherwise, 1K = 1,000Ω, 1M = 1,000kΩ

Resistor Type		Wattage		Tolerance
ERD	: Carbon	10 : 1/8W	12 : 1/2W	J : ±5%
ERG	: Metal Oxide	14 : 1/4W	25 : 1/4W	F : ±1%
ERQ	: Fuse Type Metal	1A : 1W	18 : 1/8W	G : ±2%
ERX	: Metal Film	S2 : 1/4W	S1 : 1/2W	J : ±5%
ERD L	: Carbon (chip)	2F : 1/4W	50 : 1/2W	K : ±10%
ERO K	: Metal Film (chip)	2A : 2W	3A : 3W	M : ±20%
ERC	: Solid	6G : 1/10W	8G : 1/8W	
ERF	: Incombustible Box-Shaped			
ERM	: Wire-Wound			
RRJ	: Cip Resistor			
ERJ	: Cip Resistor			

Capacitor Type		Voltage		Tolerance
ECE	: Electrolytic	0J : 6.3V	1A : 10V	K : ±10%
ECCD	: Ceramic	1C : 16V	1E : 25V	M : ±20%
ECKD	: Ceramic Capacitor	1H : 50V	1V : 35V	Z : +80 −20 %
ECQM	: Poyester	50 : 50V	05 : 50V	
ECQP	: Polypropylene	2H : 500V	2A : 100V	J : ±5%
ECG	: Ceramic	1 : 100V	1J : 63V	G : ±2%
ECEA N	: Non Polar Electrolytic	KC : 400V AC		F : ±1%
QCU	: Ceramic (Chip Type)	KC : 125V AC (UL)		C : ±0.25pF
ECUX	: Ceramic (Chip Type)			D : ±0.5pF
ECF	: Semiconductor			
EECW	: Liquid electrolyte double layer capacitor			

Ref. No.	Part No.	Value.
RESISTORS(VALUE,WATTAGE)		
R101	ERDS2TJ221	220 1/4
R102	ERDS2TJ472	4.7K 1/4
R103	ERDS2TJ472	4.7K 1/4
R104	ERDS2TJ472	4.7K 1/4
R105	ERDS2TJ472	4.7K 1/4
R106	ERDS2TJ103	10K 1/4
R107	ERDS2TJ103	10K 1/4
R108	ERDS2TJ103	10K 1/4
R109	ERDS2TJ103	10K 1/4
R110	ERDS2TJ223	22K 1/4
R111	ERDS2TJ223	22K 1/4
R112	ERDS2TJ223	22K 1/4
R113	ERDS2TJ223	22K 1/4
R114	ERDS2TJ472	4.7K 1/4
R115	ERDS2TJ472	4.7K 1/4
R116	ERDS2TJ473	47K 1/4
R117	ERDS2TJ473	47K 1/4
R118	ERDS2TJ223	22K 1/4
R119	ERDS2TJ223	22K 1/4
R120	ERDS2TJ223	22K 1/4
R121	ERDS2TJ223	22K 1/4
R122	ERDS2TJ121	120 1/4
R123	ERDS2TJ121	120 1/4
R124	ERDS2TJ681	680 1/4
R125	ERDS2TJ682	6.8K 1/4
R126	ERDS2TJ473	47K 1/4
R127	ERDS1FJ271	270 1/2
(E, EG, XL, XA)		
(PA, PE, EI)		
(EH, EB, EF)		
R127	ERD25FJ151	150 1/4
(EK)		
R128	ERDS2TJ472	4.7K 1/4
R129	ERDS2TJ223	22K 1/4
R130	ERDS2TJ223	22K 1/4
R131	ERDS2TJ393	39K 1/4
R201	FSR25TJ153T2	15K 1/4
R202	FSR25TJ123T2	15K 1/4
R401	ERD25FJ332	3.3K 1/4
R402	ERD25FJ332	3.3K 1/4
R403	ERD25TJ473	47K 1/4
R404	ERD25TJ473	47K 1/4
R405	ERD25TJ273	27K 1/4
R406	ERD25TJ273	27K 1/4
R409	ERD25FJ821	820 1/4
R410	ERD25FJ821	820 1/4
R413	ERDS2TJ121	120 1/4
R414	ERDS2TJ121	120 1/4
R415	ERDS2TJ121	120 1/4
R416	ERDS2TJ121	120 1/4
R417	ERD25FJ121	120 1/4
R418	ERD25FJ121	120 1/4
R419	ERD25FJ121	120 1/4
R420	ERD25FJ121	120 1/4
R421	ERDS2TJ563	56K 1/4
R422	ERDS2TJ563	56K 1/4
R423	ERDS2TJ563	56K 1/4
R424	ERDS2TJ563	56K 1/4
R425	ERD25FJ121	120 1/4
R426	ERD25FJ121	120 1/4
R427	ERD25FJ121	120 1/4
R428	ERD25FJ121	120 1/4
R429	ERDS2TJ393	39K 1/4
R430	ERDS2TJ393	39K 1/4
R431	ERDS2TJ332	3.3K 1/4
R432	ERDS2TJ332	3.3K 1/4
R433	ERDS2TJ102	1K 1/4
R434	ERDS2TJ102	1K 1/4
R435	ERDS2TJ223	22K 1/4
R436	ERDS2TJ223	22K 1/4
R437	ERDS2TJ223	22K 1/4
R438	ERDS2TJ223	22K 1/4
R439	ERD25FJ101	100 1/4
R440	ERD25FJ101	100 1/4
R441	ERD25FJ101	100 1/4
R442	ERD25FJ101	100 1/4
R443	ERD25FJ2R2	2.2 1/4
R444	ERD25FJ2R2	2.2 1/4
R445	ERD25FJ2R2	2.2 1/4
R446	ERD25FJ2R2	2.2 1/4
R447	ERD25FJ561	560 1/4
R448	ERD25FJ561	560 1/4
R451	ERDS2TJ333	33K 1/4
R452	ERDS2TJ333	33K 1/4
R453	ERDS2TJ333	33K 1/4
R454	ERDS2TJ333	33K 1/4
R457	ERDS1FJ122	1.2K 1/2
R458	ERDS1FJ122	1.2K 1/2
R459	ERDS1FJ122	1.2K 1/2
R460	ERDS1FJ122	1.2K 1/2
R467	ERDS2TJ102	1K 1/4
R468	ERDS2TJ102	1K 1/4
R501	ERD25FJ561	560 1/4
R502	ERD25FJ561	560 1/4
R503	ERDS2TJ122	1.2K 1/4
R504	ERDS2TJ122	1.2K 1/4
R505	ERDS2TJ121	120 1/4
R506	ERDS2TJ121	120 1/4
R507	ERDS2TJ121	120 1/4
R508	ERDS2TJ121	120 1/4
R509	ERD25FJ561	560 1/4
R510	ERD25FJ561	560 1/4
R511	ERD25FJ561	560 1/4
R512	ERD25FJ561	560 1/4
R513	ERDS2TJ104	100K 1/4
R514	ERDS2TJ104	100K 1/4
R515	ERD25FJ332	3.3K 1/4
R516	ERD25FJ332	3.3K 1/4
R517	ERD25FJ1R0	1 1/4
R518	ERD25FJ1R0	1 1/4
R519	ERD25FJ1R0	1 1/4
R520	ERD25FJ1R0	1 1/4
R521	ERD25FJ332	3.3K 1/4
R522	ERD25FJ332	3.3K 1/4
R551	ERDS2TJ103	10K 1/4
R552	ERDS2TJ103	10K 1/4
R553	ERDS2TJ332	3.3K 1/4
R554	ERDS2TJ332	3.3K 1/4
R555	ERDS2TJ122	1.2K 1/4
R556	ERDS2TJ122	1.2K 1/4
R557	ERD25FJ331	330 1/4
R558	ERD25FJ331	330 1/4
R559	ERD25FJ2R2	2.2 1/4
R560	ERD25FJ2R2	2.2 1/4

Ref. No.	Part No.	Value.
R561	ERD25FJ2R2	2.2 1/4
R562	ERD25FJ2R2	2.2 1/4
R563	ERD25FJ2R2	2.2 1/4
R564	ERD25FJ2R2	2.2 1/4
R565	ERD25FJ2R2	2.2 1/4
R566	ERD25FJ2R2	2.2 1/4
R567	ERF2AKR22P	0.22 2
R568	ERF2AKR22P	0.22 2
R569	ERF2AKR22P	0.22 2
R570	ERF2AKR22P	0.22 2
R571	ERDS1FJ100	10 1/2
R572	ERDS1FJ100	10 1/2
R573	ERD25FJ1R0	1 1/4
R574	ERD25FJ1R0	1 1/4
R575	ERX1ANJ100	10 1
R576	ERX1ANJ100	10 1
R577	ERG2SJ331H	330 2
R578	ERG2SJ331H	330 2
R579	ERF2AKR22P	0.22 2
R580	ERF2AKR22P	0.22 2
R581	ERF2AKR22P	0.22 2
R582	ERF2AKR22P	0.22 2
R583	ERD25FJ681	680 1/4
R584	ERD25FJ681	680 1/4
R585	ERD25FJ681	680 1/4
R586	ERD25FJ681	680 1/4
R587	ERX1ANJ100	10 1
R588	ERX1ANJ100	10 1
R601	ERDS2TJ153	15K 1/4
R602	ERDS2TJ153	15K 1/4
R603	ERD25FJ271	270 1/4
R604	ERD25FJ271	270 1/4
R605	ERD25FJ472	4.7K 1/4
R606	ERD25FJ472	4.7K 1/4
R607	ERDS2TJ473	47K 1/4
R608	ERDS2TJ563	56K 1/4
R609	ERDS2TJ153	15K 1/4
R611	ERDS2TJ153	15K 1/4
R613	ERDS1FJ681	680 1/2
R614	ERG2ANJ681	680 2
R615	ERG2ANJ681	680 2
R616	ERDS1FJ681	680 1/2

Ref. No.	Part No.	Value.
R624	ERDS1FJ682	6.8K 1/2
R625	ERDS2TJ563	56K 1/4
R626	ERDS2TJ103	10K 1/4
CAPACITORS(VALUE,VOLTAGE)		
C1 ⚠	ECKWNS103ZVS	0.01
C101	ECEA1EK3R3B	3.3 25
C102	ECEA1EK3R3B	3.3 25
C103	ECKD1H103PF	0.01 50
C104	ECKD1H103PF	0.01 50
C201 (EG. EI)	ECCD1H181K	180P 50
C202 (EG. EI)	ECCD1H181K	180P 50
C401	ECCC1H221K	220P 50
C402	ECCC1H221K	220P 50
C403	ECCD2H330K	33P 500
C404	ECCD2H330K	33P 500
C405	ECCD2H560K	56P 500
C406	ECCD2H560K	56P 500
C407	ECCD2H560K	56P 500
C408	ECCD2H560K	56P 500
C409	ECKD1H103PF	0.01 50
C410	ECKD1H103PF	0.01 50
C411	ECEA1HK010	1 50
C412	ECEA1HK010	1 50
C413	ECEA1HK010	1 50
C414	ECEA1HK010	1 50
C415	ECEA1APH221E	220 10
C416	ECEA1APH221E	220 10
C423	ECCD1H151K	150P 50
C424	ECCD1H151K	150P 50
C451	ECEA1EK100	10 25
C452	ECEA1EK100	10 25
C453	ECEA1EK100	10 25
C454	ECEA1EK100	10 25
C455	ECEA1EK100	10 25
C456	ECEA1EK100	10 25
C457	ECEA1EK100	10 25
C458	ECEA1EK100	10 25
C501	ECQM1H822JZ	0.0082 50
C502	ECQM1H822JZ	0.0082 50
C505	ECKD1H103PF	0.01 50

Ref. No.	Part No.	Value.
C506	ECKD1H103PF	0.01 50
C507	ECKD1H103PF	0.01 50
C508	ECKD1H103PF	0.01 50
C509	ECEA1APH221E	220 10
C510	ECEA1APH221E	220 10
C511	ECEA1APH221E	220 10
C512	ECEA1APH221E	220 10
C513	ECKD1H103PF	0.01 50
C514	ECKD1H103PF	0.01 50
C515	ECKD1H103PF	0.01 50
C516	ECKD1H103PF	0.01 50
C517	ECKD1H271KB	270P 50
C518	ECKD1H271KB	270P 50
C551	ECKD1H681K	680P 50
C552	ECKD1H681K	680P 50
C553	ECKD1H681K	680P 50
C554	ECKD1H681K	680P 50
C555	ECKD1H103PF	0.01 50
C556	ECKD1H103PF	0.01 50
C557	ECQM1H473JZ	0.047 50
C558	ECQM1H473JZ	0.047 50
C559	ECQM1H473JZ	0.047 50
C560	ECQM1H473JZ	0.047 50
C601	ECEA0JS331	330 6.3
C602	ECEA0JK470	47 6.3
C603	ECEA1EK4R7	4.7 25
C604	ECKD1H223PF	0.022 50
C605	ECEA1EK4R7	4.7 25
C606	ECEA1CU222	2200 16
C607	ECQE2104KS	0.1 250
C608	ECQE2104KS	0.1 250
C609	ECET71V472LM	4700 71
C610	ECET71V472LM	4700 71
C611	ECET71V472LM	4700 71
C612	ECET71V472LM	4700 71
C613	ECET71V472LM	4700 71
C614	ECET71V472LM	4700 71
C615	ECET71V472LM	4700 71
C616	ECET71V472LM	4700 71
C617	ECEA1EK3R3	3.3 25
C618	ECKD1H103PF	0.01 50
C623	ECKD1H333PF	0.033 50
C624	ECKD1H333PF	0.033 50
C701	ECEA0JU222	2200 6.3

Printed in Japan
F880207000YY/TW/IM